Topics:
Birds
Transmission lines
Wildlife management
Endangered species
Radar
Night vision

EPRI EA-4120
Project 1636
Final Report
June 1985

Radar, Electro-optical, and Visual Methods of Studying Bird Flight Near Transmission Lines

Prepared by
Clemson University
Clemson, South Carolina

REPORT SUMMARY

SUBJECT	Transmission: Overhead lines
TOPICS	Birds Transmission lines Wildlife management Endangered species Radar Night vision
AUDIENCE	Environmental scientists and managers

Radar, Electro-optical, and Visual Methods of Studying Bird Flight Near Transmission Lines

Concern about the effects of transmission lines on bird mortality and flight patterns has caused utilities construction delays, line rerouting, and permit denials. A new mobile laboratory that combines radar, electro-optical, and video technologies allows researchers to study local and migratory bird behavior near utility and other structures.

BACKGROUND

Projections for transmission line construction in the near future indicate that utilities cannot afford serious delays or construction problems. Since the 1970s, environmentalists and utilities have become increasingly concerned about birds flying into transmission lines. Although some studies have documented the frequency and severity of such collisions, the magnitude of the problem is not known; a need exists for a generic, quantitative, and practical methodology for monitoring bird flight near transmission lines.

OBJECTIVE

To develop an all-weather, day-and-night method of documenting bird flight patterns near utility transmission lines.

APPROACH

The project team constructed and field-tested a mobile laboratory in varied weather conditions at 15 sites across the United States. The laboratory contains the following equipment: two small marine radars for measuring the altitude of migrating birds and examining geographic patterns of movement within a few kilometers; an electro-optical image intensifier for visual studies of birds at night; a closed-circuit television system and videocassette recorder for recording information from the fixed-beam radar and image intensifier; and a 16-mm movie camera with electronic shutter control for recording the surveillance radar display. Throughout the field tests, researchers supplemented radar readings by viewing the birds directly through binoculars or indirectly via the closed-circuit television. On very dark nights, they used a light beam to illuminate the birds' movements.

RESULTS

Researchers found that the video, direct observation, and radar techniques complemented each other. The visual techniques provided detailed information on the types and numbers of birds and their behavior near transmission

lines. Radar, on the other hand, verified the sightings and provided accurate information on the range of the birds' flights. Although radar detected only the supporting towers, not the lines themselves, it was able to detect birds at greater distances than could binoculars or video cameras. On short pulse, the radar could detect small birds such as warblers at 1200–1500 ft (365.8–457.3 m) and birds the size of geese at 1–1.5 mi (1.6–2.4 km). Long pulse increased these distances by a factor of 2, but image resolution was poorer.

EPRI PERSPECTIVE

The methodology described in this report is the first of its kind, offering the utility industry a tool for quantifying the effect of structures on bird flight behavior. Although the mobile laboratory was designed specifically for utility use, it appears to be applicable to many other situations as well, including bird strikes near airports, television towers, or smokestacks.

PROJECT

RP1636
EPRI Project Manager: John W. Huckabee
Energy Analysis and Environment Division
Contractor: Clemson University

For further information on EPRI research programs, call
EPRI Technical Information Specialists (415) 855-2411.

Radar, Electro-optical, and Visual Methods of Studying Bird Flight Near Transmission Lines

EA-4120
Research Project 1636

Final Report, June 1985

Prepared by

CLEMSON UNIVERSITY
Department of Biological Sciences
Clemson, South Carolina 29631

Author
S. A. Gauthreaux, Jr.

Prepared for

Electric Power Research Institute
3412 Hillview Avenue
Palo Alto, California 94304

EPRI Project Manager
J. W. Huckabee

Ecological Studies Program
Energy Analysis and Environment Division

ORDERING INFORMATION

Requests for copies of this report should be directed to Research Reports Center (RRC), Box 50490, Palo Alto, CA 94303, (415) 965-4081. There is no charge for reports requested by EPRI member utilities and affiliates, U.S. utility associations, U.S. government agencies (federal, state, and local), media, and foreign organizations with which EPRI has an information exchange agreement. On request, RRC will send a catalog of EPRI reports.

Copyright © 1985 Electric Power Research Institute, Inc. All rights reserved.

NOTICE

This report was prepared by the organization(s) named below as an account of work sponsored by the Electric Power Research Institute, Inc. (EPRI). Neither EPRI, members of EPRI, the organization(s) named below, nor any person acting on behalf of any of them: (a) makes any warranty, express or implied, with respect to the use of any information, apparatus, method, or process disclosed in this report or that such use may not infringe privately owned rights; or (b) assumes any liabilities with respect to the use of, or for damages resulting from the use of, any information, apparatus, method, or process disclosed in this report.

Prepared by
Clemson University
Clemson, South Carolina

ABSTRACT

This report describes a mobile research laboratory that has been developed for the Electric Power Research Institute (EPRI) to monitor local and migratory movements of birds near transmission lines during the day and at night. The mobile laboratory has two small marine radars: a fixed-beam type that can be directed vertically to measure the altitude of migrating birds and a surveillance type that can be used to examine the geographical patterns of movement within a range of a few kilometers. The laboratory is also equipped with an image intensifier for visual studies of bird movements at night. A closed circuit television system and a video cassette recorder are used to record information from the fixed-beam radar and the image intensifier. A 16-mm movie camera with an electronic shutter control is used to record the display of the surveillance radar. The design, construction, and operation of the mobile laboratory are covered in this report. In addition, the techniques for making and recording observations, and the methods of data analysis are presented and discussed in detail. Although the mobile laboratory was designed to study bird movements in the vicinity of transmission lines, the system can be used to gather valuable information on the patterns of bird movements in many diverse situations (e.g., near airports that have potential bird strike problems, near tall obstructions like television towers, and smoke stacks).

ACKNOWLEDGMENTS

The work on this project would not have been possible without the generous cooperation of several individuals and organizations. Several individuals associated with the electrical, mechanical, and carpentry shops in the College of Sciences at Clemson University assisted in modifications and installations of equipment in the mobile laboratory including: James Eubanks, Donald Daugherty, James Mann, Lamar Durham, and Jewell Harper. The personnel of the National Weather Service station at Lake Charles, Louisiana, were particularly helpful in providing weather data and access to the WSR-57 radar. Likewise, the radar technicians, flight service personnel, and flight controllers at the Federal Aviation Administration office at Lake Charles, Louisiana, assisted me greatly in the early phases of the project involving the ASR-5 radar. The personnel of the following utilities and agencies provided considerable assistance during the project: Bonneville Power Administration, Colorado-UTE Electric Association, Delmarva Power and Light Company, Florida Power and Light Company, Montana Power Company, Pacific Gas and Electric Company, Southern California Edison Company, Northern Prairie Wildlife Research Center--U. S. Fish and Wildlife Service, Willdan Associates, Montana Department of Fish and Game, Santa Ana National Wildlife Refuge, Crow Butte State Park in Washington, Alamosa-Monte Vista National Wildlife Refuge Complex, Biology Department--University of North Dakota, Salton Sea National Wildlife Refuge, and the Charles M. Russell National Wildlife Refuge in Montana. Dr. Paul Kerlinger served as a post-doctoral research associate of this project in 1982. Jeff Beacham, Anna Ross, and Steve Wagner served as graduate research assistants during portions of Phase II. Anna Ross helped type the final report.

CONTENTS

Section		Page
1	INTRODUCTION	1-1
	Background	1-1
	EPRI Project	1-2
	Phase I	1-2
	Phase II	1-3
	References	1-5
2	MARINE RADAR SYSTEMS	2-1
	Introduction	2-1
	Fixed-Beam Radar	2-1
	Marine Surveillance Radar	2-7
	Discussion	2-9
	References	2-12
3	THE ELECTRO-OPTICAL SYSTEMS	3-1
	Introduction	3-1
	Image Intensifier	3-1
	Closed Circuit Television System	3-2
	The Automatic Cine Filming System	3-10
	Motion Analyzer	3-11
	Discussion	3-12
4	OBSERVATION TECHNIQUES AND DATA ANALYSIS	4-1
	Introduction	4-1
	Data Acquisition Methods	4-1
	Description of Study Site	4-2

Section	Page
Recording of Weather Data	4-2
Direct and Indirect Visual Observation Techniques	4-5
Direct Visual Observation Techniques	4-5
Indirect Visual Observation Techniques	4-8
Radar Observation Techniques	4-10
Fixed-Beam Radar	4-10
Surveillance Radar	4-12
Discussion	4-14
Data Analysis Methods	4-18
References	4-20

ILLUSTRATIONS

Figure		Page
2-1	The two marine radars in the mobile laboratory. The fixed-beam system with the parabolic dish antenna is shown on the right and the surveillance unit with the "T"-bar antenna is on the left.	2-2
2-2	A diagram of the radar antenna pedestal from a side view (A) and a front view (B). The basic components are (a) the supporting base, (b) the movable antenna frame, (c) the large locking screws, (d) the brake mechanism and screw, (e) the waveguide rotary joint, (f) the power outlet box and coaxial cable connectors, and (g) the antenna frame extension for the video camera. The radar antenna is 24 in (60 cm) in diameter.	2-3
2-3	The parabolic dish antenna and pedestal mount for the fixed-beam radar. The antenna is positioned for measurements of altitude.	2-4
2-4	The parabolic antenna of the fixed-beam radar is shown with the aluminum collar in position.	2-5
2-5	The display unit of the fixed-beam radar inside the mobile laboratory.	2-6
2-6	Decca 150 Marine Surveillance Radar. A. Scanner unit (aerial, turning motor and drive mechanism, transceiver and filter box). B. Display unit: (a-c) heading, (d) tuning, (e, g) anti-clutter, (f) gain, (h) range, (j) range rings, (k) brilliance, (l) panel lights, and (m) rotating cursor.	2-8
3-1	The image intensifier attached to a low light level video camera.	3-3
3-2	A diagram of the closed-circuit video system in the mobile laboratory. (a) is camera TC 1005/01, (b) is the image intensifier, (c) is camera TC 1005/H01, (d) is the display unit of the LN 66 marine radar, (e) is the splitter/inserter TC 1470, (f) is the date and time generator TC 1440B, (g) is the video recorder NV 8200, and (h) is the video monitor TC 1217.	3-4
3-3	The arrangement of the video camera and night vision scope in relation to the vertically pointing radar beam and spotlight. This arrangement is used for observing birds flying overhead at night.	3-5

Figure		Page
3-4	Photograph of video monitor showing split image display. The narrow, vertical portion on the left of the screen comes from camera "2" and shows the radar beam with a bright spot at its base. The remainder of the screen shows the sky overhead as recorded by camera "1" with the image intensifier attached. The white spots are the stars, and the date and time are shown at the top of the display.	3-7
3-5	The bright diagonal streak on the monitor is produced by a bird flying toward the southeast. If the radar display seen here is compared to that in Figure 3-4, the echo from the bird can be seen at the top of the bright base of the beam.	3-8
3-6	Automatic shutter mechanism for the Bolex camera.	3-9
3-7	The movie camera setup for filming the Decca 150 radar display. Note the end of the light tight hood.	3-10
3-8	Display of the Decca 150 radar on 0.75 nautical mile range. The photograph was made at Flamingo, Florida in January 1983.	3-12
4-1	Display of the Decca 150 radar on 0.75 nautical mile range. This photograph shows the study site near Alamosa, Colorado.	4-3
4-2	Radar displays of the Decca 150 near Alamosa, Colorado. The top photograph shows the clutter in the center of the display with normal video, but the clutter has been eliminated in the bottom photograph which was taken with the anti-clutter circuit on.	4-4
4-3	Sample data sheet for recording direct visual observations of birds flying in the vicinity of transmission lines. [Source: Willdan Associates (8).]	4-6
4-4	Basic altitude classes used to describe approach, crossing, and departure of flights. The heights of the lowest three classes can be measured with a rangefinder. [Source: James and Haak 4, p. 16.]	4-7
4-5	Sample data sheet for recording information from the video tape record.	4-13
4-6	The mobile laboratory at Crow Butte, Washington, where a 500 kV transmission line crosses the Columbia River.	4-17
4-7	Radar display of the 500 kV line crossing the Columbia River at Crow Butte, Washington.	4-18
4-8	Computer plots of data taken from a video tape record of bird migration in the spring of 1981.	4-20

TABLES

Table		Page
1-1	Study Sites for Phase II	1-4
2-1	Operational Characteristics of Small Marine Radars	2-10

SUMMARY

In the last decade electric utilities have become increasingly concerned about the environmental effects of transmission lines on birds in flight. The matter has attracted considerable attention from environmentalists as well. A lack of data and the abundance of speculation on the impact of transmission lines on avian flight behavior has resulted in costly delays, route changes, and refusal of permits for line construction projects. Even existing transmission lines have been the focus of attention with regard to bird collision mortality. Clearly the need exists for a thorough assessment of the impact of transmission lines on the flight behavior of birds and collision mortality. The first step in generating such a generic study is the development of the equipment and methods to do the job.

In 1979 the Energy Analysis and Environment Division of the Electric Power Research Institute initiated a project to study avian interactions with transmission lines. The project involved two phases. Phase I was to consist of the acquisition, calibration, and testing of equipment and methodologies (particularly radar, night vision devices, closed circuit television and other visual observation techniques) for studying the flight behavior of birds in the vicinity of transmission lines, with particular emphasis on the quantification of collision mortalities. Work on this project was begun in mid-May 1980 and completed in mid-May 1981.

Phase II was to consist of modifications of the mobile laboratory, namely the addition of another marine radar, development of automatic radar filming procedures, and further testing and evaluation of the laboratory at several locations in the western, central, and eastern United States. The sites were chosen on the basis of geographical location and the interest expressed by certain

electric utilities. Phase II began in the fall of 1981 and was completed during the spring of 1984. During Phase II several tasks were accomplished. Another marine radar was installed in the mobile laboratory in January 1982, and the usefulness of fixed-beam and rotating-beam radar configurations was subsequently evaluated during the spring and fall of 1982 throughout the United States. In January and February 1983, tests of the automatic filming mechanism designed to film the display of the surveillance radar was completed in the Everglades of Florida, and during the spring of 1984, the mobile laboratory was used to monitor the roosting and feeding flights of Sandhill and Whcoping Cranes near a transmission line during their migratory stopover near Alamosa, Colorado.

The two marine radar systems in the mobile laboratory have 10 kw power and 3 cm wavelengths. One is modified to operate in a fixed-beam configuration with the parabolic dish antenna pointing vertically to monitor bird movements overhead. The second radar system is an unmodified marine radar that operates in a typical surveillance mode and is used to monitor low altitude bird movements within 5 km of the radar. The fixed-beam radar can accurately measure the altitudinal distribution of birds flying overhead; the surveillance radar can accurately determine the flight patterns in relation to a transmission line. The two radars complement each other.

Because radar, even high resolution marine radar, does not afford the resolution necessary to observe the behavior of birds flying near transmission lines, it was necessary to monitor the flight behavior of birds in the immediate vicinity of the transmission line by direct visual observations or with a high resolution video camera. During the daylight hours 10x50 binoculars or a television camera with a zoom lens was used, and during the night the camera was coupled to an image intensifier to observe the flight behavior of birds. On particularly dark nights, a light beam was used to provide some illumination. The light beam had no detectable effect on the flight behavior of the birds.

By using another video camera inside the mobile laboratory to monitor the radar screen it was possible to record birds passing through the visual field and the radar beam simultaneously on the screen of a television monitor. This was achieved by having the signals from the two video cameras go to a video splitter/inserter unit. The fixed-beam of the radar was displayed on the monitor in a narrow, vertical band on the extreme left side of the screen while the view up the radar beam filled the remainder of the screen. A date and time generator displayed the date and time at the top of the television screen. With this arrangement it was possible to see the flight behavior of a bird and see its echo along the radar beam at the same time. A video recorder was used to record observations, particularly when bird flight activity was great.

By directing the video camera outside the mobile laboratory and the radar antenna vertically to sample the same space overhead, it was possible to observe the directions and altitudes of birds flying overhead. The video camera was always positioned so that the top of the television screen was toward the north, the right of the screen was west, and the left of the screen was east. During the day the video camera had a zoom lens, and at night the video camera was coupled with an image intensifier. At night a narrow light beam was used to provide illumination when in areas where no ground lighting reflected skyward. When analyzing the video tape records, the following information was recorded on the data forms: time of event, direction of movement, altitude of movement, and type of bird(s). The use of this technique can provide valuable information on the proportion of bird movements aloft that take place at low altitudes where transmission lines can potentially influence flight behavior and present a collision hazard.

The marine radar that operates in the surveillance mode can monitor the flight patterns of birds within 5 km of the radar. The radar display is filmed automatically with a 16 mm cine camera equipped with an electronic shutter control. Every other revolution of the radar antenna is recorded. While filming, an observer can view directly with binoculars, or indirectly with closed circuit

television, the flight behavior of birds and can record more detailed information.

Many of the developments related to the design and functioning of the mobile laboratory have already been communicated to interested parties, and at least two similar units have been constructed and are being used to study bird movements in Southern California and in Utah. It is clear that a mobile laboratory equipped with electro-optical devices and fixed- and rotating-beam radars can be used successfully to detect, monitor, and quantify local and migratory movements of birds in the vicinity of existing and planned transmission lines. The original concept of a mobile laboratory is a workable one, and it appears that the utility of the laboratory for applications other than transmission lines is far greater than originally expected.

Section 1

INTRODUCTION

BACKGROUND

The problem of birds flying into elevated wires has existed for over a century (1 and 2), but the environmental effects of transmission lines on birds in flight did not receive much attention from environmentalists until the decade of the 1970's. A workshop on the impacts of transmission lines on birds in flight was held from 31 January through 2 February 1978 at Oak Ridge Associated Universities (ORAU) sponsored by the National Power Plant Team of the United States Fish and Wildlife Service and ORAU (3). The workshop addressed several questions in an intensive, three-day session, but the effects of transmission lines on bird flight behavior and collision mortality and the scope of the problem received the greatest attention. There was an obvious paucity of data from detailed, carefully planned studies that could be used to answer the most pressing questions.

In a 1981 paper, Coleman (4) pointed out that the prospect of an ever-increasing demand for electricity has alarmed environmentalists because of perceived environmental dangers associated with its generation and transmission. He suggests that long distance transmission of electricity will continue to be one of the primary means of bulk energy transport. As of 1981, 123,677 circuit-miles (199,479 circuit-kilometers) of high voltage lines (230-kV to 800-kV) existed in North America, and by 1987 approximately 57,603 additional circuit-miles (92,908 circuit-kilometers) of transmission lines are planned. Direct current lines of up to 1000-kV and about 5,699 circuit-miles (9,192 circuit-kilometers) are also expected by 1987, representing about 3 per cent of the total circuit-miles of transmission lines by that date. Because current and projected energy demands dictate considerable additional transmission line construction in the near future (see

references 4 and 5), a careful, nationwide assessment of the impact of transmission lines on bird flight behavior and collision mortality was thought to be imperative (3).

A lack of data and the abundance of speculation on the impact of transmission lines has resulted in costly delays, route changes, and refusal of permits for line construction projects. Although some pertinent research projects have been completed that provide some data regarding the extent and magnitude of the interactions between flying birds and transmission lines (e.g., 6 - 23), there is a need to establish a detailed, generic design for assessing the impact of electric power transmission lines on bird flight behavior and collision mortality. As I (24) pointed out in a review of completed, ongoing, and planned research on the impact of transmission lines on migratory and local movements of birds, a major aspect of such a study design must involve a detailed methodology for monitoring, quantifying, and analyzing bird movements and flight behavior in the vicinity of completed and proposed transmission lines.

EPRI PROJECT

In 1979, the Energy Analysis and Environment Division of the Electric Power Research Institute (EPRI) initiated a project to study avian interactions with transmission lines. The project defined a 2-year program with a total effort of approximately 3-4 professional man-years.

Phase I

Phase I of the project consisted of the aquisition, calibration, and testing of equipment and methodologies (particularly radar, night vision scopes, closed-circuit television and other visual observation techniques, and dead bird searches) for studying bird behavior in the vicinity of transmission lines, with particular emphasis on quantification of collision mortalities. Phase I of the project was funded in early 1980, and Dames and Moore, Inc. of Los Angeles, California, was awarded the portion of the project dealing with dead bird searches while Dr. Sidney

Gauthreaux of Clemson University, South Carolina, was responsible for developing and testing a mobile laboratory equipped with radar and other electro-optical devices for studying bird movements in the vicinity of transmission lines.

During Phase I of the EPRI project RP 1636-- "Investigations of Avian Interactions with Transmission Lines: Radar and Direct Visual Methods of Study," I developed and evaluated a mobile laboratory equipped with radar and electro-optical equipment to study bird behavior in the vicinity of transmission lines, with particular emphasis on local and migratory movement of birds. The mobile laboratory was developed at Clemson University and initially evaluated in the field at Clemson and Charleston, South Carolina, during the summer and fall of 1980. Further evaluation was completed during the late winter and spring of 1981 at Beaumont, Texas, and Lake Charles, Louisiana. The latter locations were chosen because of the abundance and diversity of bird life and the intensity of local and migratory movements of birds that occur during the day and at night. These locations also had airport surveillance and weather surveillance radars that were essential for a comprehensive evaluation of radar and electro-optical equipment in the mobile laboratory. The initial testing of the mobile laboratory during Phase I was completed in mid-May and a technical report was submitted to EPRI in September 1981 (25). As a result of a project review of EPRI RP 1636 on 13 February 1981 in Palo Alto, several recommendations were made concerning the modification of the mobile laboratory and of the procedures for recording data. These modifications were made during Phase II of the project.

Phase II

Phase II of the project "Avian Interactions with Transmission Lines" began in the fall of 1981 and was completed during the spring of 1984. During Phase II several tasks were accomplished. Another marine radar was installed in the mobile laboratory in January 1982, and the usefulness of fixed-beam and rotating-beam configurations was subsequently evaluated. In the spring and fall of 1982 further evaluations of the performance of the mobile laboratory were made at several

locations in the western, central, and eastern United States (Table 1-1). The sites were chosen on the basis of geographical location and the interest expressed by certain electric utilities. In January and February 1983, tests on the automatic filming of the radar screen of the Decca 150 were completed in Florida, and during the spring of 1984, the mobile laboratory was used to monitor the roosting and feeding flights of Sandhill and Whooping Cranes near transmission lines during their migratory stopover at Alamosa, Colorado (Table 1-1).

Table 1-1

STUDY SITES FOR PHASE II

Location	Dates
Salton Sea - San Jacinto Valley, California	18 February - 24 February 1982
Crow Butte, Washington	26 February - 12 March 1982
Salton Sea - Desert Hot Springs, California	17 March - 24 March 1982
Santa Ana National Wildlife Refuge, Texas	28 March - 16 April 1982
Beaumont, Texas and Lake Charles - Cameron, Louisiana	17 April - 14 May 1982
Duluth, Minnesota	12 August - 16 August 1982
Broadview, Montana	17 August - 5 September 1982
Jamestown, North Dakota	6 September - 9 September 1982
Grand Forks, North Dakota	11 September - 15 September 1982
Hawk Mountain Sanctuary, Pennsylvania	19 September 1982
Stone Harbor - Cape May, New Jersey - Wilmington, Delaware	23 September - 18 October 1982
Flamingo, Florida	20 January - 1 February 1983
Cocoa - Canaveral, Florida	3 February 1983
Lake Charles - Cameron, Louisiana	3 May - 13 May 1983
Alamosa - Monte Vista, Colorado	18 March - 8 April 1984

Many of the developments related to the design and functioning of the mobile laboratory have already been communicated to interested parties, and at least two similar units have been constructed and are being used to study bird movements in Southern California (26) and in Utah (27). It is clear that a mobile laboratory equipped with electro-optical devices and fixed- and rotating-beam radars can be used successfully to detect, monitor, and quantify local and migratory movements of birds in the vicinity of existing and planned transmission lines. The original concept of a mobile laboratory is a workable one, and it appears that the utility of the laboratory for applications other than transmission lines is far greater than originally expected (28).

The design, construction, and operation of the mobile laboratory are covered in the technicial report that follows. In addition, the techniques for making and recording observations, and the methods of data analysis are presented and discussed in detail. Considerable additional data on migratory, feeding, and roosting flights of birds were gathered during Phases I and II of the project. Most of these data have been analyzed, and several research papers based on the data will appear in the refereed literature (e.g., 29).

REFERENCES

1. E. Coues. The destruction of birds by telegraph wire. American Naturalist 10, 1876, pp. 734-736.

2. C. Alderich. Destruction of birds by telegraph wires. American Naturalist 11, 1877, pp. 686-687.

3. M. L. Avery (ed.). Impacts of transmission lines on birds in flight. Proceedings of the workshop on impacts of transmission lines on migratory birds. 31 Jan.-2 Feb. 1978, Oak Ridge, Tenn. Oak Ridge Associated Universities, Oak Ridge, Tennessee. September 1978, p. 151. Supt. Doc. U.S. Govt. Printing Office, Washington, D.C. FWS/OBS-78/48

4. D. M. Coleman. Impacts of overhead high voltage transmission lines. J. Environmental Systems 10 (4), 1981, pp. 283-304.

5. T. J. Nagel. Operating a major electric utility today. Science 201, 1978, pp. 985-993.

6. W. L. Anderson. Waterfowl collisions with powerlines at a coal-fired power plant. Wildl. Soc. Bull. 6, 1978, pp. 77-83.

7. D. L. Beaulaurier. Mitigation of bird collisions with transmission lines. Prepared for Bonneville Power Administration, Portland, Oregon by Western Interstate Commission for Higher Education. Boulder, Colorado, 1981, p. 83.

8. J. F. Cassel, D. W. Kiel, J. J. Knodel, and J. M. Wiehe. Relation of birds to certain power transmission lines in central North Dakota. North Dakota State University, Fargo, North Dakota, 1979, p. 50.

9. G. Cornwell and H. A. Hockbaum. Collisions with wires--a source of Anatid mortality. Wilson Bulletin, 83, 1971, pp. 305-306.

10. B. W. James. Impact of the Ashe-Slatt 500 kV transmission line on birds at Crow Butte Island: Preconstruction study. Final Report for the Bonneville Power Administration, Portland, Oregon, by the Western Interstate Commission for Higher Education. Boulder, Colorado, 1980, p. 98.

11. B. W. James and B. A. Haak. Factors affecting avian flight behavior and collision mortality at transmission lines. Final Report for Bonneville Power Administration by the Western Interstate Commission for Higher Education. Bonneville Power Administration, Portland, Oregon, 1979, p. 110.

12. G. L. Krapu. Avian mortality from collisions with overhead wires in North Dakota. Prairie Nat. 6, 1974, pp. 1-6.

13. J. N. McDonald. Waterfowl collisions with utility wires: Two observations on the southern plains. Texas J. Sci. 31, 1979, pp. 369-370.

14. J. R. Meyer. Effects of transmission lines on bird flight behavior and collision mortality. Report prepared for Bonneville Power Administration by the Western Interstate Commission for Higher Education. Bonneville Power Administration, Portland, Oregon, 1978, p. 200.

15. J. R. Meyer and J. M. Lee. Effects of transmission lines on flight behavior of waterfowl and other birds. In: R. E. Tillman (ed.). Environmental concerns in rights-of-way management. Proceedings of the second symposium October 16-18, 1979, Ann Arbor, Michigan, 1981, pp. 62.1-62.15. Electric Power Research Institute, Palo Alto, Calif. Publication no. WS 78-141.

16. M. Owen and C. J. Cadbury. The ecology and mortality of swans at the Ouse Washes, England. Wildfowl 26, 1975, pp. 31-42.

17. T. A. Renssen. Vogels onder hoogspanning. Reeks Natuur en Milieu 10, 1977, p. 47. (ISBN 9070 211 068)

18. R. E. Scott, L. J. Roberts, and C. J., Cadbury. Bird deaths from powerlines at Dungeness. British Birds 65, 1972, pp. 273-286.

19. L. S. Thompson. Transmission line wire strikes: Mitigation through engineering design and habitat modification. In: M. L. Avery (ed.). Impacts of transmission lines on birds in flight. Proceedings of the workshop on impacts of transmission lines on migratory birds. 31 Jan.-2 Feb. 1978, Oak Ridge, Tenn. Oak Ridge Associated Universities, Oak Ridge, Tennessee. September 1978, pp. 27-52. Supt. Doc. U.S. Govt. Printing Office, Washington, D.C.

20. D. E. Willard, J. T. Harris, and M. J. Jaeger. The impact of a proposed 500 kv transmission route on waterfowl and other birds. Final Report for Public Utilities Commission, Salem, Oregon, 1977, p. 89.

21. D. E. Willard and B. J. Willard. The interaction between some human obstacles and birds. Env. Manage. 2, 1978, pp. 331-340.

22. Willdan Associates. Impact of the Ashe-Slatt 500 kV transmission line on birds at Crow Butte Island: Postconstruction study year 1. Prepared for Bonneville Power Administration, Portland, Oregon, 1981, p. 110.

23. Willdan Associates. Impact of the Ashe-Slatt 500 kV transmission line on birds at Crow Butte Island: Postconstruction study final report. Prepared for Bonneville Power Administration, Portland, Oregon, 1982, p. 155.

24. S. A. Gauthreaux, Jr. The impact of transmission lines on migratory birds: Assessment of completed, ongoing, and planned research and an analysis of future research needs. Report prepared for the Electric Power Research Institute, 1978, p. 43.

25. S. A. Gauthreaux, Jr. Avian interactions with transmission lines: Radar and direct visual methods of study. Phase I. Final technical report. Electric Power Research Institute, Palo Alto, California, 1981, p. 42.

26. R. McKernan, M. McCrary, W. Wagner, R. Landry, and R. Schreiber. Observations on nocturnal and diurnal bird use in relation to the proposed Devers-Valley 500 kV transmission line in the San Jacinto Valley, winter 1981-82. Report for Research and Development and Environmental and Regulatory Affairs, Southern California Edison Company, Rosemead, California, by the Los Angeles County Natural History Museum Foundation, Section of Ornithology, Los Angeles, California, 1982, p. 63.

27. David Mindell. Department of Zoology, Brigham Young University, Provo, Utah. Personal communication.

28. S. A. Gauthreaux, Jr. The use of small mobile radars to detect, monitor, and quantify bird movements. In: M. J. Harrison, S. A. Gauthreaux, L. A. Abron-Robinson (eds.). Proceedings of the wildlife hazards to aircraft conference and training workshop, May 22-May 25, 1984, Charleston, South Carolina. Office of Airport Standards, Federal Aviation Administration, U.S. Dept. of Transportation, Washington, D.C., 1984, pp. 121-131. DOT/FAA/AAS/84-1.

29. P. Kerlinger and S. A. Gauthreaux, Jr. Flight behaviour of Sharp-shinned Hawks during fall migration: I. Over land. Animal Behaviour 32, 1984, pp. 1021-1028.

Section 2

MARINE RADAR SYSTEMS

INTRODUCTION

Powerful weather and airport surveillance radars can be used to detect, monitor, and quantify migratory movements of birds (1-3), however these units are not very useful for gathering detailed information on bird movements within a few kilometers of the radar station. Moreover, the geographical distribution of these large, fixed-base radars is such that a unit may not be located near a desired study site. In contrast, small marine surveillance radars can provide useful information on the movements of birds within a range of a few kilometers, the units are relatively inexpensive, and they can be mounted on a small truck or van and powered by a small 500 kw gasoline generator (4-6). In this section, I discuss the operational characteristics of two small marine radars that have been installed in the mobile laboratory.

The two radar systems in the mobile laboratory are operated in totally different configurations (Figure 2-1). The first marine radar installed in the mobile laboratory in the fall of 1980 was modified by replacing the "T"-bar antenna with a parabolic dish antenna that does not rotate in the conventional manner. This fixed-beam radar is used primarily as a narrow-beam radar range finder that can be directed horizontally or vertically. The second marine radar installed early in 1982 is unmodified (off-the-shelf) and is used in a conventional surveillance mode.

FIXED-BEAM RADAR

In order to assess the utility of radar detection of bird movements in the vicinity of transmission lines, a surplus marine radar (already on hand from a previous project) was modified to suit the needs of this project. The marine radar

Figure 2-1. The two marine radars in the mobile laboratory. The fixed-beam system with the parabolic dish antenna is shown on the right and the surveillance unit with the "T"-bar antenna is on the left.

(Canadian Marconi Company, LN 66) is a X-band (3 cm wavelength) radar system consisting of three separate, interconnected units. These are: the antenna (or scanner) with its associated motor and gear box assembly; the transmitter/receiver unit which contains the I.F. amplifier and power supply; and the display unit. For this project the original antenna and gear box were eliminated and replaced with a new antenna and pedestal that permitted fixed-beam monitoring in a horizontal or vertical configuration.

The new radar antenna is a 24 in (60 cm) parabolic dish with X-band feed and a WR-90 flange input (Radio-Research Instrument Co. Part No. 20-3-24X). The antenna is mounted on a pedestal that enables the entire antenna assembly to swing from a

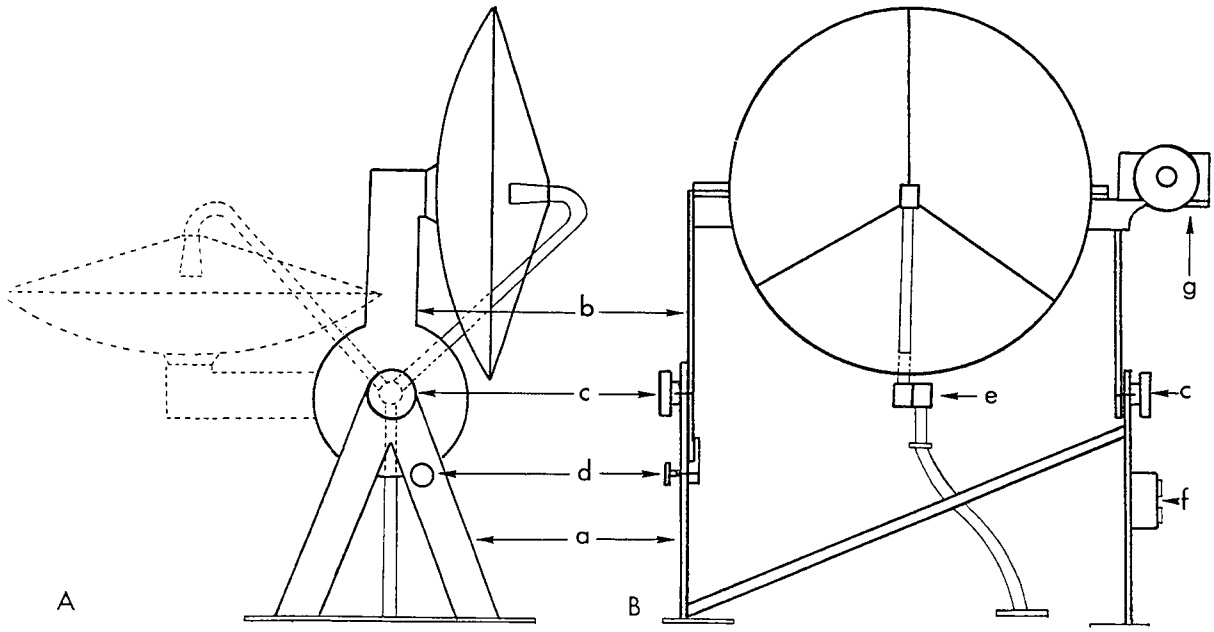

Figure 2-2. A diagram of the radar antenna pedestal from a side view (A) and a front view (B). The basic components are (a) the supporting base, (b) the movable antenna frame, (c) the large locking screws, (d) the brake mechanism and screw, (e) the waveguide rotary joint, (f) the power outlet box and coaxial cable connectors, and (g) the antenna frame extension for the video camera. The radar antenna is 24 in (60 cm) in diameter.

vertical position for fixed-beam horizontal monitoring to a horizontal position for fixed-beam vertical monitoring (see Figures 2-2 and 2-3.) The 3 cm radar waveguide from the antenna feed goes to a X-band rotary joint, and a piece of flexible waveguide passes through the roof of the vehicle and connects the rotary joint with the transmitter/receiver (T/R) unit of the radar. Except for the waveguide, no electrical connection exists between the antenna and the T/R unit. To prevent excessive scattering of radar energy from the shallow parabolic antenna, an aluminum collar (12 in, 0.31 m, high) was designed to fit around the antenna. The collar is easily removed after a period of observation and before the vehicle is moved (see Figure 2-4).

The transmitter/receiver unit is 18.5 in (46.3 cm) high, 12.5 in (31.3 cm) wide, 8.5 in (21.3 cm) deep, and weighs 45 lbs (20.4 kg). The transmitter has a peak

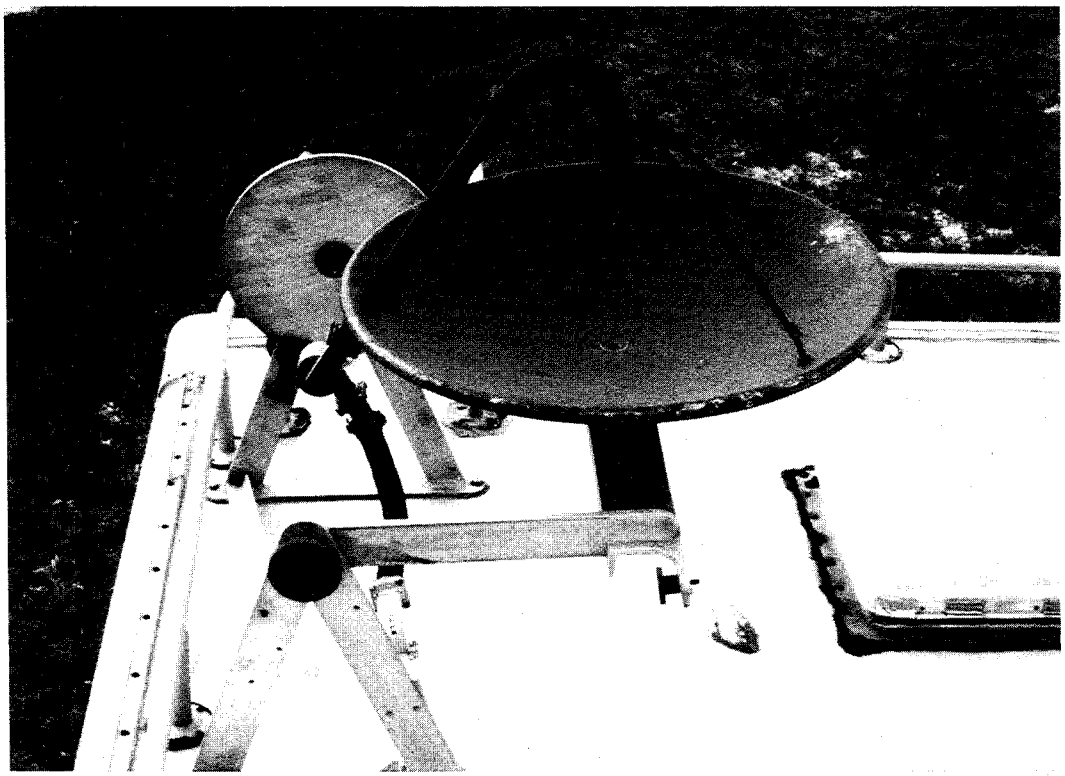

Figure 2-3. The parabolic dish antenna and pedestal mount for the fixed-beam radar. The antenna is positioned for measurements of altitude.

output of 10 kw, a frequency of 9345 to 9405 MHz, and pulse widths of 0.05 microseconds in the 0.5, 1.5, and 3 mile (0.8, 2.4, and 4.8 km) ranges and 0.5 microseconds in the 6, 12, and 24 mile (9.7, 19.3, and 38.6 km) ranges. The pulse repetition is 1250 pulses per second in the 6, 12, and 24 mile ranges and 2500 pulses per second in the 0.5, 1.5, and 3 mile ranges. The modulator is a hard tube type. The receiver of the T/R unit has a noise figure of 11 db overall. The intermediate frequency is 45 MHz, the I.F. bandwidth is 14 MHz, and the I.F. response is linear. All circuits are transistor except the cathode ray tube, the magnetron, blocking oscillator tube, output tube, and klystron. All fuses are fast acting to protect transistorized equipment. The T/R unit is connected to the display unit by a 32 conductor cable.

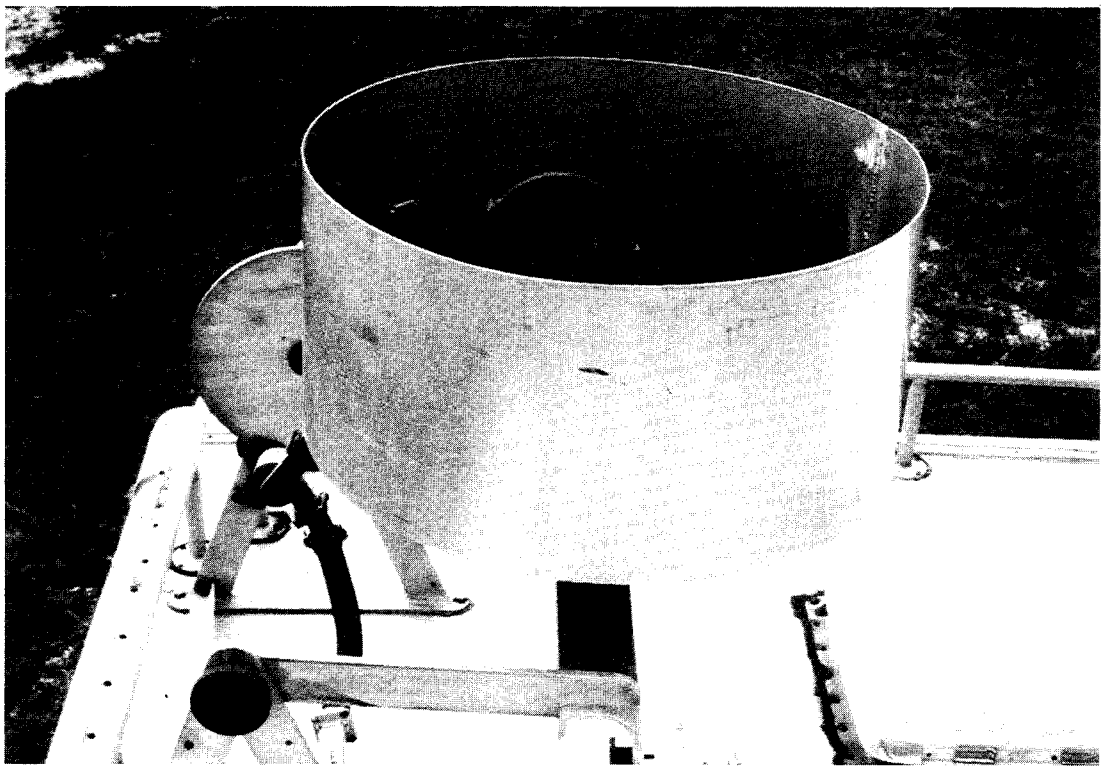

Figure 2-4. The parabolic antenna of the fixed-beam radar is shown with the aluminum collar in position.

The display unit is 17 in (42.5 cm) high, 13.5 in (33.8 cm) wide, and 23 in (57.5 cm) long (Figure 2-5). The unit weighs 50 lbs (22.7 kg) and has a 10 in (25 cm) diameter cathode ray tube with P 33 phosphor and a fixed coil. The range scales available are 0.5, 1.5, 3, 6, 12, and 24 statute miles (0.8, 2.4, 4.8, 9.7, 19.3, and 38.6 km). A variable range marker gives a direct range reading for any target on the Plan Position Indicator (PPI) and this reading is plus or minus one per cent of the indicated range. The display unit has adjustments for tuning, sweep amplitude, off-centering, sensitivity time control (sea clutter and rain/fast time constant [FTC]), beam intensity, video gain, long or short pulse, and panel lights. The input voltage to the radar is 115 volts AC, 2.1 amps, 50-60 Hz and this is changed to 36 volts DC by an AC power supply. The power supply has reversed polarity protection and has a transistorized series type voltage regulator.

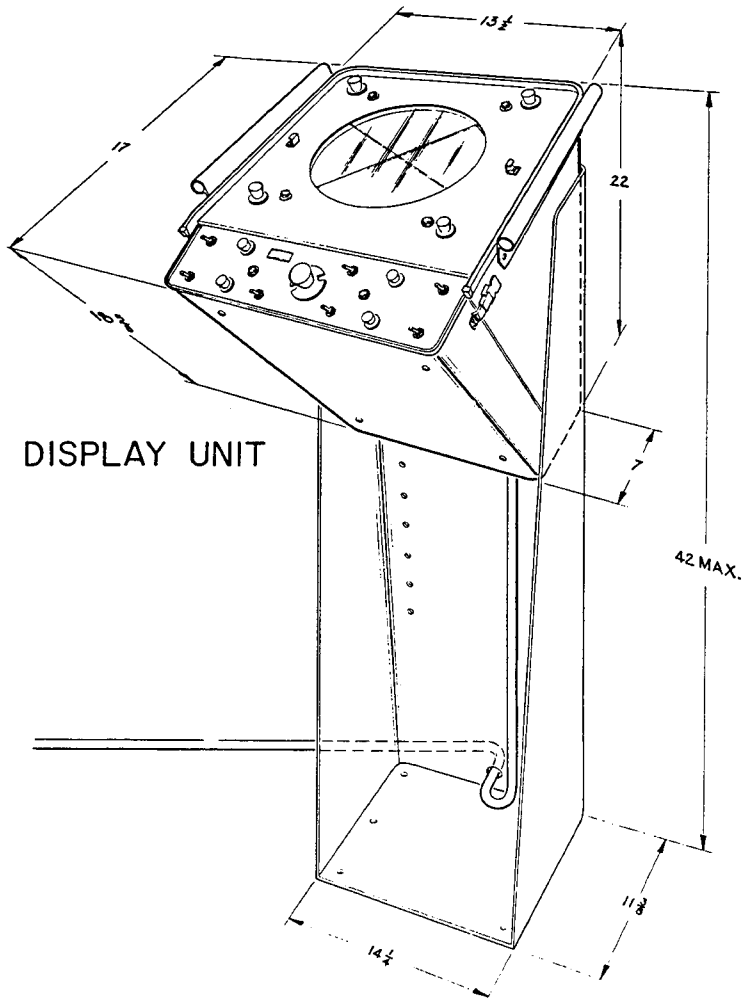

Figure 2-5. The display unit of the fixed-beam radar inside the mobile laboratory.

For radar operation, the switch on the AC power unit and the power switch on the display unit must be turned on. During operation the sea-clutter and rain/fast time constant (FTC) must be turned off because these circuits reduce the sensitivity of the radar. After about three minutes, a delay relay in the T/R unit will close so that when the transmit switch is turned on, the high voltage will be applied to the magnetron and to the cathode ray tube. The radar will then be operative. The radar can be tuned only when on long pulse (0.5 microseconds) and after approximately ten minutes of transmitting. Additional details of operation can be found in the instruction manual (131-957) provided by the Canadian Marconi Company.

The fixed-beam radar in the mobile laboratory can detect birds flying overhead as well as the larger and more powerful (500 kw) surveillance radars operated by the National Weather Service (the WSR-57 radar) and the Federal Aviation Administration (ASR-5, 6, 7). When the fixed-beam radar is operated on long pulse it is more sensitive but resolution is lost and birds cannot be detected within 0.09 mi (0.14 km) of the antenna. On short pulse, targets less than 27 yd (25 m) above the antenna can be detected but sensitivity is reduced. Consequently, a small bird (5 in, 12.5 cm) flying at a high altitude (0.31 mi, 0.5 km) would not be detected when the radar is operated on short pulse, but it would probably be detected if the radar were operated on long pulse and properly tuned. In general single small songbirds cannot be detected at ranges beyond 0.75 mi (1.2 km), but single larger birds (e.g., Ring-billed Gull, Larus delawarensis) can be detected out to 1.5 mi (2.4 km).

Although the fixed-beam radar can be operated with the antenna locked at any angle between horizontal and vertical, most data to date have been gathered with the antenna adjusted to point vertically to monitor bird movements overhead. In this mode the radar functions as an altitudinal range finder. When the fixed-beam radar is operating (transmitting and receiving), the radar screen of the display unit (Figure 2-5) located inside the mobile laboratory, shows only a thin, slightly illuminated line that does not move. As targets pass through the narrow radar beam (approximately 4° to the half-power points), echoes appear along the line. The distance of the echoes from the base of the line is a function of the distance of the target from the radar antenna (see page 3-9).

MARINE SURVEILLANCE RADAR

The mobile laboratory also has an unmodified Decca 150 marine surveillance radar. The Decca 150 is a 3 cm, 10 kw radar with essentially the same specifications as the fixed-beam radar. The major difference between the two is that the

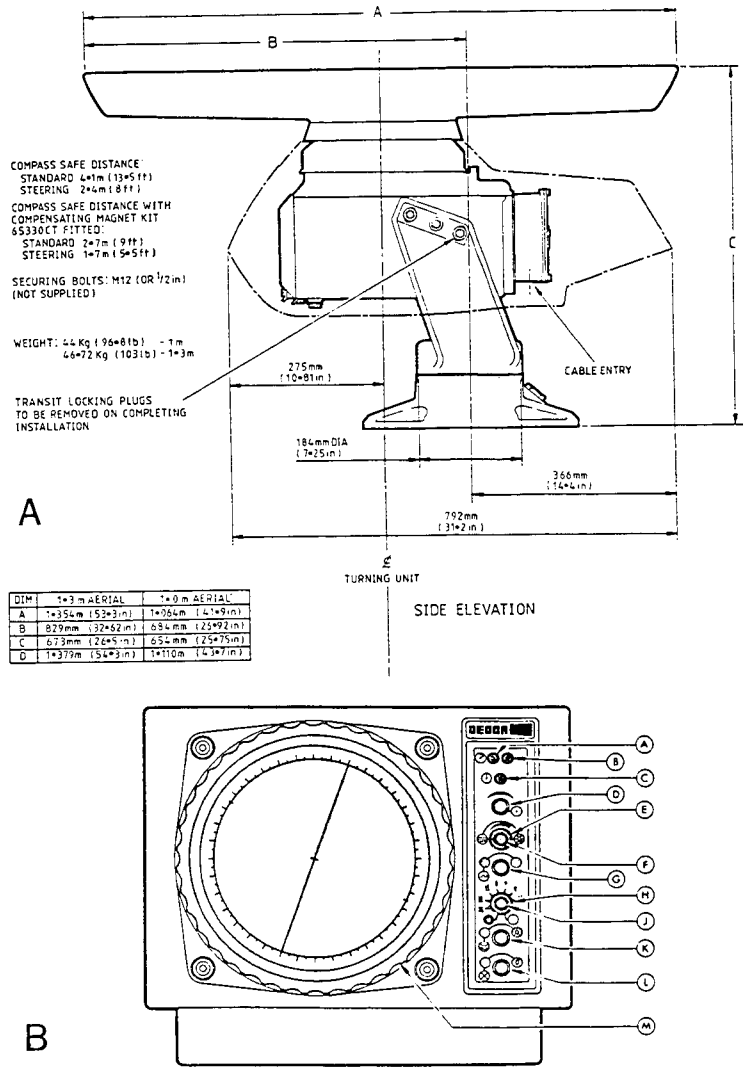

DIM	1·3 m AERIAL	1·0 m AERIAL
A	1·354m (53·3in)	1·064m (41·9in)
B	829mm (32·62in)	654mm (25·92in)
C	673mm (26·5in)	654mm (25·75in)
D	1·379m (54·3in)	1·110m (43·7in)

Figure 2-6. Decca 150 Marine Surveillance Radar. A. Scanner unit (aerial, turning motor and drive mechanism, transceiver and filter box). B. Display unit: (a-c) heading, (d) tuning, (e, g) anti-clutter, (f) gain, (h) range, (j) range rings, (k) brilliance, (l) panel lights, and (m) rotating cursor.

transmitter/receiver unit of the Decca 150 is a part of the scanner assembly and enclosed in a molded, fiberglass-reinforced plastic casing (Figure 2-6A). A rectifier produces an output of 32 volts direct current from the 115 volt alternating current generated in the mobile lab. The 32 volts DC drives the power supply and the motor of the scanner unit.

The display unit contains all the circuitry necessary for processing received echoes and displaying them along with internally generated data (e.g., range marks) on the PPI (plan position indicator) (see Figure 2-6B). To maximize sensitivity the anti-sea clutter and anti-rain clutter dials (e and g in Figure 2-6B) should be in the off position. Most data on bird movements have been gathered with the radar on 3 nautical mile range for large birds (e.g., cranes, waterfowl, flocks of migrating hawks) and on 0.75 nautical mile range for small songbirds flying singly (e.g., warblers, vireos, swallows).

Viewing bird movements directly on the PPI is difficult because the echoes fade rapidly. When time lapse cine films of the PPI are made (see Section 3), the movements are much more obvious and careful study with a motion analyzer is possible.

A comparison of three marine radars can be found in Table 2-1. The radars range from a small 5 kw unit with a 1.06 m antenna to a larger 25 kw unit with a 1.82 m antenna. The T/R units of the 5 and 10 kw radars are a part of the scanners. The T/R unit is separate in the 25 kw radar. In Table 2-1, the lines showing pulse lengths correspond to the lines in the listing of range scales (e.g., for the 5 kw radar, the pulse length for the ranges 0.25, 0.75, and 1.5 is 0.08 microsecond). Marine radars operating in the surveillance mode can be used to gather valuable information on the movements of birds within a range of a few kilometers. Because of the low power and antenna configuration, these units are most useful in studies of local and low-level migratory flights.

DISCUSSION

In a report (7) for the Electric Power Research Institute on completed, ongoing, and planned research needs for the assessment of the impact of transmission lines on bird movements, it was pointed out that the ideal system for detecting, monitoring, and quantifying bird movements near powerlines would be a mobile unit containing marine radar, image intensifier equipment, and closed circuit television

Table 2-1

OPERATIONAL CHARACTERISTICS OF SMALL MARINE RADARS

Characteristics	Marine Radar		
	Raytheon 3400	Decca 150	Decca RM 926C
TRANSMITTER			
Magnetron peak power	5kw	10kw	25kw
Radar frequency	9380-9440MHz (3cm; X-band)		
Pulse length (microsec.)/ pulse rep. frequency	0.08/3000Hz 0.35/1500Hz 0.70/750Hz	0.08/1500Hz 0.55/750Hz	0.05/3300Hz 0.25/1650Hz 1.0/825Hz
ANTENNA			
Type (slotted waveguide)	end-fed	center-fed	end-fed
Size	1.06m (3.5ft)	1.22m (4ft)	1.82m (6ft)
Rotation (rpm)	26	23	28
Beam width (Horiz.) (Vert.)	2.4° 25°	1.9° 28°	1.2° 20°
DISPLAY UNIT			
Cathode-ray tube	178mm (7in)	216mm (8.5in)	229mm (9in)
Range scales (nautical miles)	.25,.75,1.5, 3,6,12, 24,48	.25,.75,1.5, 3,6,12,24,48	.25,.50,.75,1.5, 3,6,12, 24,48,60
Minimum range	25m (<27yd)	25m (<27yd)	13.6m (15yd)
Range discrim.	20m (22yd)	23m (25yd)	9.1m (10yd)
RECEIVER			
Type	Gunn local oscillator with balanced mixer		
IF band width (pulse)	10MHz (short) 3MHz (long)	8MHz (short) 8MHz (long)	18MHz (short) 5MHz (long)
IF amplifier center freq.	38MHz	30MHz	60MHz

equipment. In such a unit the radar antenna could be mounted on the roof of the vehicle and the electro-optical equipment could be operated easily from the unit. A mobile unit would be self-contained and one individual could operate all the equipment. Moreover, a mobile laboratory could reach a large number of sample stations quickly and would contain support facilities for the operator. When time permitted, some preliminary data analysis could be done also while in the field in the mobile unit. In short, the vehicle and its associated research equipment would constitute a self contained, mobile, field research station.

During Phase I of the EPRI project "Avian Interactions with Transmission Lines" the concept of a mobile research laboratory was accepted and funds for its development and testing were provided. The preliminary design and details of construction (e.g., carpentry work, electrical work, and machining of parts) can be found in the technical report for Phase I (8). A fixed-beam configuration for the radar system was selected during Phase I. With such a configuration the narrow radar beam can be positioned either horizontally or vertically. When the beam is horizontal, the radar can be used to gather information on the amount of bird movement passing through a narrow corridor below an altitude of 100 m. This approach has also been used in another study to estimate the number of birds flying through a low-level flight corridor (9). In this mode of operation, the radar system functions similar to the horizontal laser system (10) developed to estimate the number of birds passing through a narrow cylinder of air space at low elevations during nocturnal and poor visibility periods. When the fixed-beam radar is directed vertically, the radar can be used to measure the altitudinal distribution of birds aloft except for altitudes within 25 m of the ground. Thus it is possible to determine the amount of bird movement in different altitudinal strata. When in the vertical-beam mode, the radar operates in much the same fashion as those used by Blokpoel (11) and Hunt (12). After reviewing the capabilities and shortcomings of the fixed-beam radar, the advisory committee for the project recommended that an "off-the-shelf," unmodified marine radar be added to the mobile laboratory. The reason given for

this recommendation was that when the fixed-beam radar was operated with the antenna directed horizontally, the 4° beam width failed to register the flight behavior of birds as they approached and departed from the immediate vicinity of the transmission line. With a marine radar operated in the traditional surveillance mode with the antenna rotating, birds flying at low altitudes could be monitored close to and away from the transmission line simultaneously.

In January 1982, at the beginning of Phase II of the project "Avian Interactions with Transmission Lines," a Decca 150 marine radar was installed in the mobile laboratory. Although both radars cannot operate simultaneously, having both fixed-beam and surveillance units greatly enhances the gathering of precise data on the characteristics of bird movements in all three spatial dimensions. Although Phase II of the EPRI project involved further modification, evaluation and application of the equipment and methodologies developed during Phase I, much of the work was conducted at transmission lines located in different types of ecosystems at different geographical locations. As with all developments of this type, modifications and improvements continue, and similar systems are being developed for other projects.

REFERENCES

1. E. Eastwood. Radar Ornithology. Methuen and Co. Ltd., London, 1967, p. 278.

2. S. A. Gauthreaux, Jr. Weather radar quantification of bird migration. BioScience 20, 1970, pp. 17-20.

3. S. A. Gauthreaux, Jr. Direct visual and radar methods for the detection, quantification, and prediction of bird migration. Special Publication No. 2, Department of Zoology, Clemson University, Clemson, S.C. 29631, 1980, p. 67.

4. W. L. Flock. Flight safety aspects of precision radar near air bases in bird-aircraft collision avoidance. Technical Report, ARWL-TR-72-25, U.S. Air Force Weapons Laboratory, Air Force Systems Command, Kirtland Air Force Base, NM 87117, 1972, p. 57.

5. T. C. Williams, J. Settel, P. O'Mahoney, and J. M. Williams. An ornithological radar. American Birds 26, 1972, pp. 555-557.

6. M. S. Sielman, L. A. Sheriff, and T. C. Williams. Nocturnal migration at Hawk Mountain, Pennsylvania. American Birds 35, 1981, pp. 906-909.

7. S. A. Gauthreaux, Jr. The impact of transmission lines on migratory birds: Assessment of completed, ongoing, and planned research and an analysis of future research needs. A report prepared for the Electric Power Research Institute, Palo Alto, California, p. 43.

8. S. A. Gauthreaux, Jr. Avian interactions with transmission lines: Radar and direct visual methods of study. Phase I. Final technical report. Electric Power Research Institute, Palo Alto, California, 1981. p. 42.

9. C. E. Korschgen, W. L. Green, W. L. Flock, and E. A. Hibbard. Use of radar with a stationary antenna to estimate birds in a low-level flight corridor. J. Field Ornithology 55, 1984, pp.369-375.

10. C. E. Korschgen, W. L. Green, and R. G. Seasholtz. A laser system to remotely sense bird movements. J. Wildlife Management 47, 1983, pp. 1159-1162.

11. H. Blokpoel. A preliminary study on height and density of nocturnal fall migration. Canadian Wildlife Service Report Series, Ottawa, Number 14, 1971, pp. 95-104.

12. F. R. Hunt. Automatic radar equipment to determine bird strike probability, Part 1. Night-time passerine migration. National Research Council of Canada, Ottawa, Field Note No. 69, 1975, p. 24.

Section 3

THE ELECTRO-OPTICAL SYSTEMS

INTRODUCTION

The major electro-optical systems in the mobile laboratory include 1) an image intensifier that is used in observations of the flight behavior of birds at night, 2) a closed circuit television system that combines, displays, and records data from the fixed-beam radar and the image intensifier, and 3) an automatic cine filming system that records the display of the surveillance radar. The characteristics and application of these three systems will be discussed in the order listed above.

IMAGE INTENSIFIER

A critically important factor in the mobile laboratory concept was the ability to monitor bird movements at night when ordinary visual techniques could not be used. This objective was achieved with the use of the night vision device, the AN/TVS-5, a second generation crew served weapon sight (model 9865) manufactured by Varo, Inc., Garland, Texas. The night vision sight uses a 25 mm micro-channel plate inverter intensifier tube. Image tube gain and reticle brightness are manually adjustable to compensate for different levels of ambient lighting. The sight should never be directed toward a bright light source for an extended period of time without its daylight cover assembly that contains openings of various sizes with filters. Failure to do this will result in permanent burnout damage to the intensifier tube. The sight does have automatic gain control circuitry to maintain the viewed scene illumination constant during periods of changing light levels. This eliminates the need for manual gain control when scene illumination levels are changing as during the period between sunset and darkness. The resolution of the image tube is 30 line pairs per mm, and the resolution of the system at 100 per

cent contrast is 2.5 lp/mm at .001 lux and 4.2 lp/mm at .1 lux. At 30 per cent contrast the system has a resolution of 1.9 lp/mm at .001 lux and 3.5 lp/mm at .1 lux.

The magnification of the night vision sight is 6.2x, and the field of view is nine degrees. Focus range is from 25 m to infinity. The focal length of the objective is 155 mm with a T number of 1.6. The focal length of the eyepiece is 25 mm with an eye relief of 34 mm. The diopter range is from +4 to -5. The AN/TVS-5 is 12.2 in (31 cm) long, 6.3 in (16 cm) wide, and 6.7 in (17 cm) high. The device weighs 8 lbs (3 kg), and requires 25 ma @ 2.65 VDC power. Battery life is about 12 hours. An optional battery adapter kit allows the use of standard "AA" batteries for the sight and reduces the cost of batteries substantially without sacrificing operational characteristics.

During this study the night vision sight was usually attached to the video camera by means of a specifically machined bracket that permits the camera to move toward and away from the sight. The sight and the video camera are attached to the bracket with screws so that they can be removed easily. The aluminum bracket is threaded for a tripod screw at the balance point, so that the night vision scope-video camera system can be attached to a tripod or the radar antenna framework (Figure 3-1). The night vision sight can also be attached to a tripod directly and used without the video camera.

The night vision sight and television camera can be directed horizontally to observe the flight behavior of birds in the vicinity of a transmission line or they can be directed vertically to monitor the passage of nocturnal migrants overhead.

CLOSED CIRCUIT TELEVISION SYSTEM

The closed circuit video system in the mobile laboratory permits automatic observations of bird movements near transmission lines, and the video tape provides a record of radar and visual (video camera) observations, as well as a simultaneous audio record of flight calls from birds and observer commentary. The closed

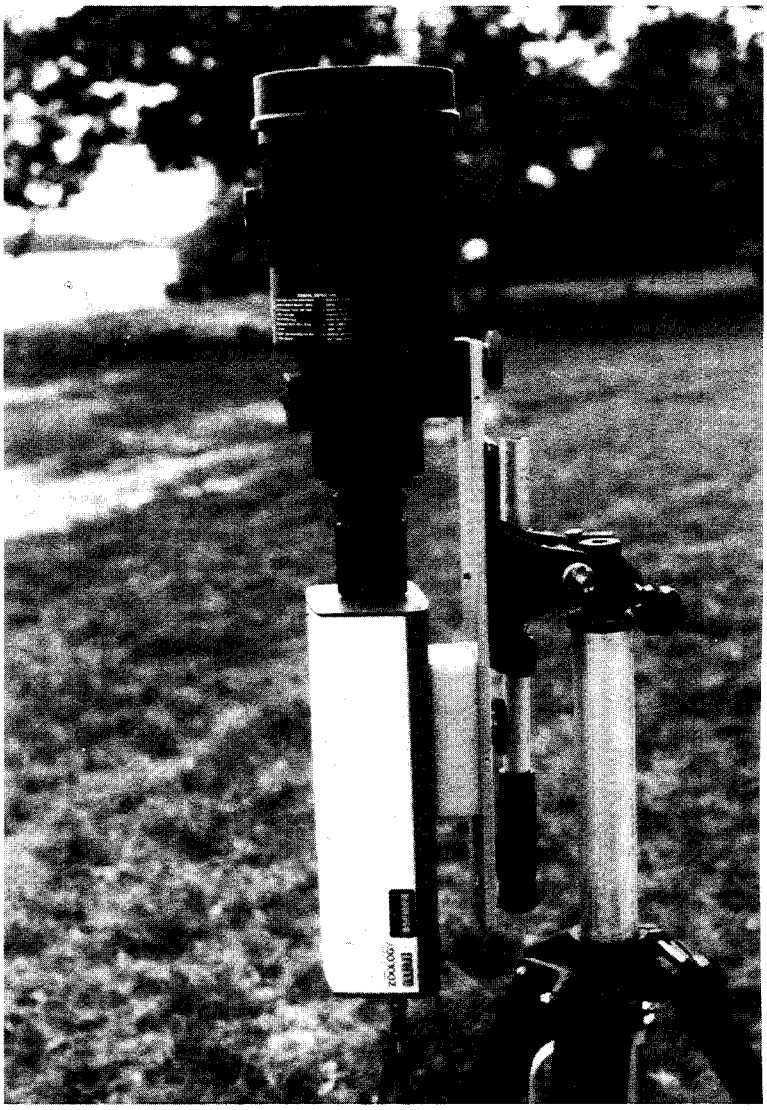

Figure 3-1. The image intensifier attached to a low light level video camera.

circuit television system (CCTV) in the mobile laboratory consists of the following: two video cameras (RCA TC 1005/H01 and RCA TC 1005/01), a television screen splitter-inserter (RCA TC 1470), a date and time generator (RCA TC 1440B), a video monitor with a 17 in (42.5 cm) screen (RCA TC 1217), and a video cassette recorder (Panasonic NV-8200). These components are shown schematically in Figure 3-2 and a description of their arrangement follows. One video camera (TC 1005/01) is attached to a telephoto lens for daytime observations or to the image

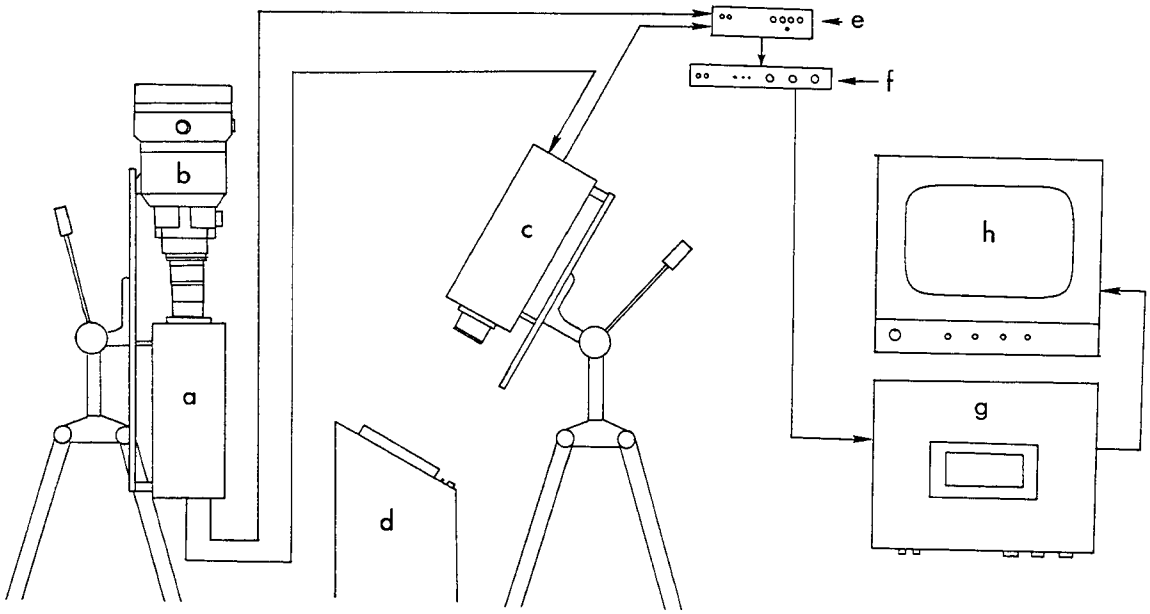

Figure 3-2. A diagram of the closed-circuit video system in the mobile laboratory. (a) is camera TC 1005/01, (b) is the image intesifier, (c) is camera TC 1005/H01, (d) is the display unit of the LN 66 marine radar, (e) is the splitter/inserter TC 1470, (f) is the date and time generator TC 1440B, (g) is the video recorder NV 8200, and (h) is the video monitor TC 1217.

intensifier for nocturnal observations. Two coaxial cables come from the camera, one cable is for the primary video output and the other cable is for the horizontal drive-video synchronization. The cables terminate in a coaxial junction box located near the rear bumper of the vehicle with the video outlet above the synchronization outlet. The power cord for the camera is plugged into an outlet box adjacent to the coaxial junction box. Because of the vibration produced by the generator, the image intensifier (or telephoto lens) and the television camera are mounted on a tripod next to the mobile laboratory as shown in Figure 3-3.

The two coaxial cables carrying the synchronization and video signals and the power cord are tied together after leaving the junction box and enter the inside of the mobile laboratory through a hole in the rear floor. Once inside the mobile laboratory, the synchronization cable goes to the synchronization connector on the second video camera (TC 1005/H01) that monitors the radar screen. The synchronization of camera one drives the synchronization of camera two. The cable

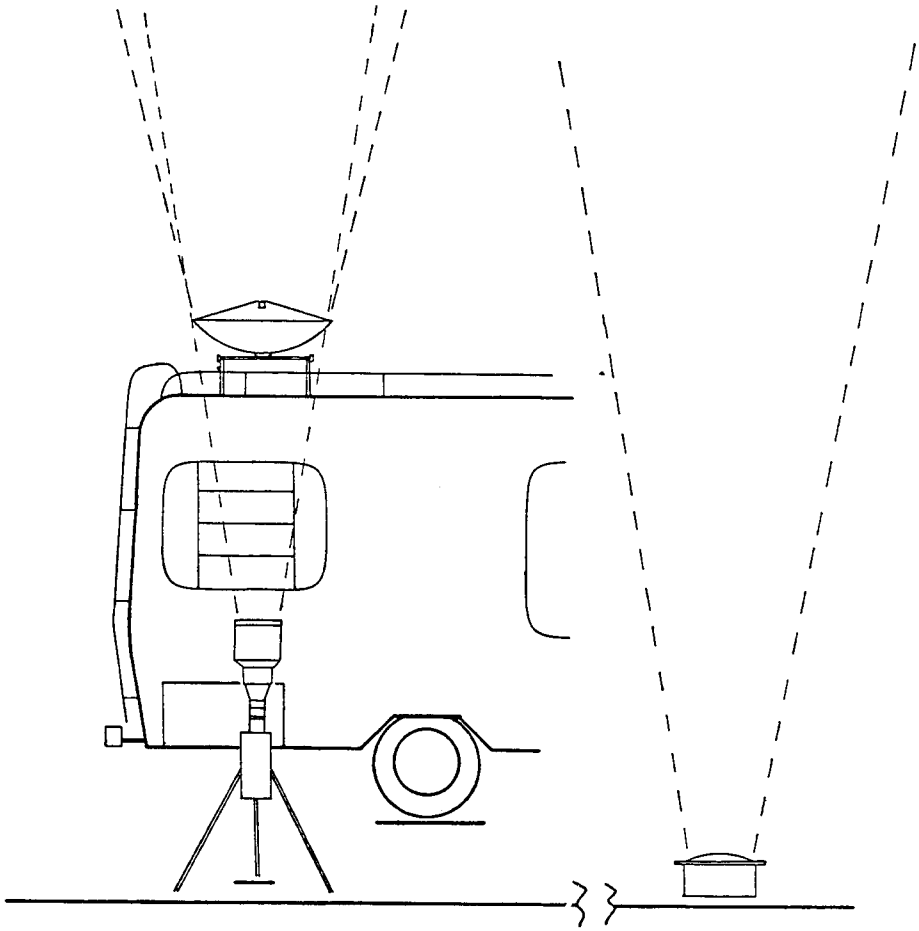

Figure 3-3. The arrangement of the video camera and night vision scope in relation to the vertically pointing radar beam and spotlight. This arrangement is used for observing birds flying overhead at night.

carrying the primary video signal goes to the connector for camera one on the rear of the video splitter-inserter (TC 1470). The power cord plugs into the outlet strip on the workbench. The camera (TC 1005/H01) that monitors the radar screen (video camera two) has a power cord and a coaxial cable leaving the rear of the camera. The coaxial cable carrying the primary video signal goes to the connector for camera two on the rear of the video splitter-inserter (TC 1470). The power cord for camera two connects to the power strip along the back of the workbench. The splitter-inserter (TC 1470) is also plugged into the outlet strip of the workbench. The screen splitter permits simultaneous display of video from two

cameras on one monitor and the recording of both on a single videotape recorder. Either camera can be displayed full screen, or a portion of one video display can be inserted into the display of the other. The front panel of the splitter contains an off-on switch and a switch that selects camera one display, split displays, or camera two display. In addition, the front panel has adjustments for insert or split size position in the vertical and horizontal and a balance control for the equilization of picture brightness when two camera displays are split on the video monitor. A coaxial cable joins the video output connector at the rear of the splitter-inserter to the video input connector at the rear of the video date and time generator (TC 144 OB).

The video date and time generator (TC 144 OB) is plugged into the outlet strip on the workbench. The time display is locked to the power line frequency so that when frequencies are low the time is slow and when the frequencies are high the time runs fast. There is however no cumulative error. During power outages of up to ten minutes, an electronic flywheel maintains timing information but with less accuracy and no display. The date and time can be displayed anywhere on the screen in a stacked or horizontal configuration. The size of the numerals can be controlled from five to 15 per cent of picture height. The brightness of the numerals can be changed manually or automatically when changes occur in background brightness level. The seconds, minutes, hour, day, month, and year can be set by adjusting the toggle set-levers on the front panel of the date and time generator. A coaxial cable carries the video signals from the video output jack on the rear of the date and time generator to the video input jack on the video cassette recorder (Panasonic NV 8200). The video signals are then passed to the monitor (RCA TC 1217) by a coaxial cable between the video output connector of the video cassette recorder and the video input connector on the television monitor. Both the recorder and the monitor plug into the outlet strip on the workbench.

The video cassette recorder (Panasonic NV 8200) is an industrial 0.5 in (12.7 mm) VHS recorder with solenoid controls that provides two hours of recording time. The

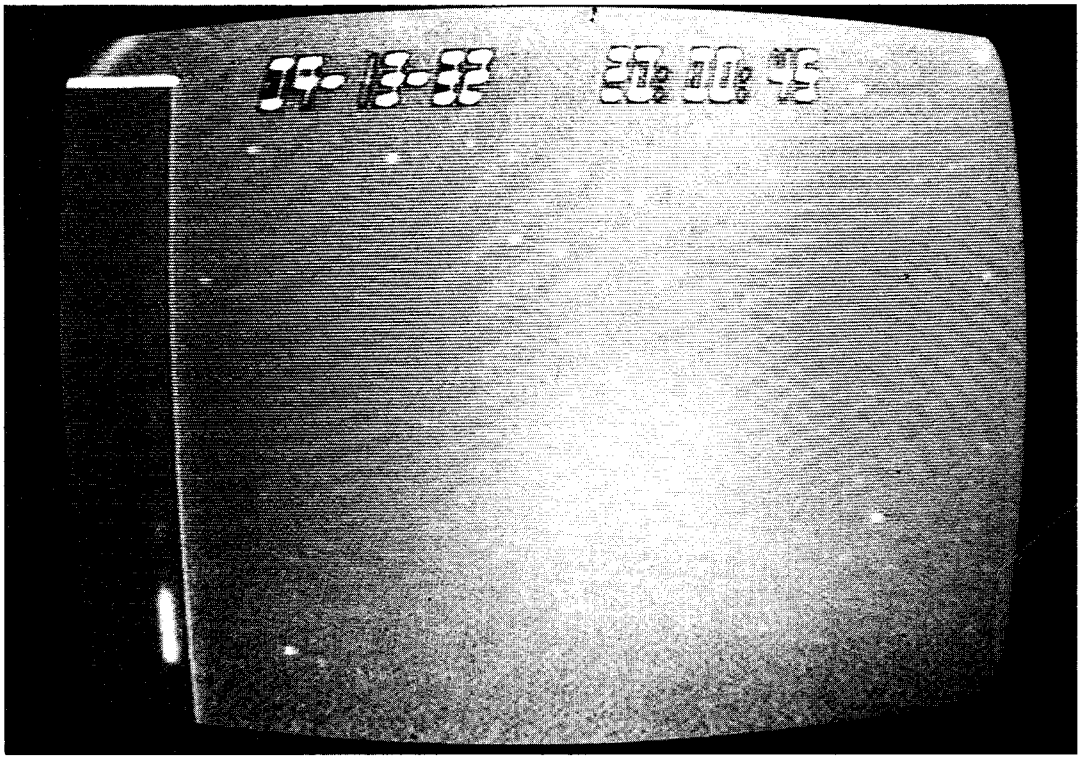

Figure 3-4. Photograph of video monitor showing split image display. The narrow, vertical portion on the left of the screen comes from camera "2" and shows the radar beam with a bright spot at its base. The remainder of the screen shows the sky overhead as recorded by camera "1" with the image intensifier attached. The white spots are the stars, and the date and time are shown at the top of the display.

non-locking "logic memory" pushbuttons allow change from fast forward, play, and rewind functions without using the stop button. The recorder has still frame and single frame advance with with automatic still frame compensation to help produce interference-free still frames. Still mode is automatically terminated after approximately three minutes. For analysis of video tapes the recorder has variable speeds from 0.2 to 1.5 times normal speed (1.31 in per sec or 33.35 mm per sec) and a 2 times normal speed for fast searching. The recorder has slightly more than 300 lines resolution for black and white video signals, and the two audio input channels have a frequency response of 50 to 10,000 Hz. An auto-search controller (Panasonic NV-A800) provides numerical identification (by seconds) of locations on the video tape for fast access, forward and backward.

Figure 3-5. The bright diagonal streak on the monitor is produced by a bird flying toward the southeast. If the radar display seen here is compared to that in Figure 3-4, the echo from the bird can be seen at the top of the bright base of the beam.

The monochrome video monitor (RCA TC 1217) has a screen size of 17 in (42.5 cm) measured diagonally and a center resolution of 800 lines minimum. Because all video signals terminate at the monitor, the termination switch on the rear of the monitor must be in the 75 ohm position. When the closed circuit video system is operating, the video monitor displays information from both video cameras (Figure 3-4). The video from camera two (monitoring the radar screen) is displayed in a narrow strip on the extreme left of the television screen while the video from camera one (monitoring the visual scene) is displayed over the remaining area of the television screen.

In the case shown in Figure 3-4, the radar beam is pointing vertically, and the image intensifier attached to camera one is pointing up the radar beam. The

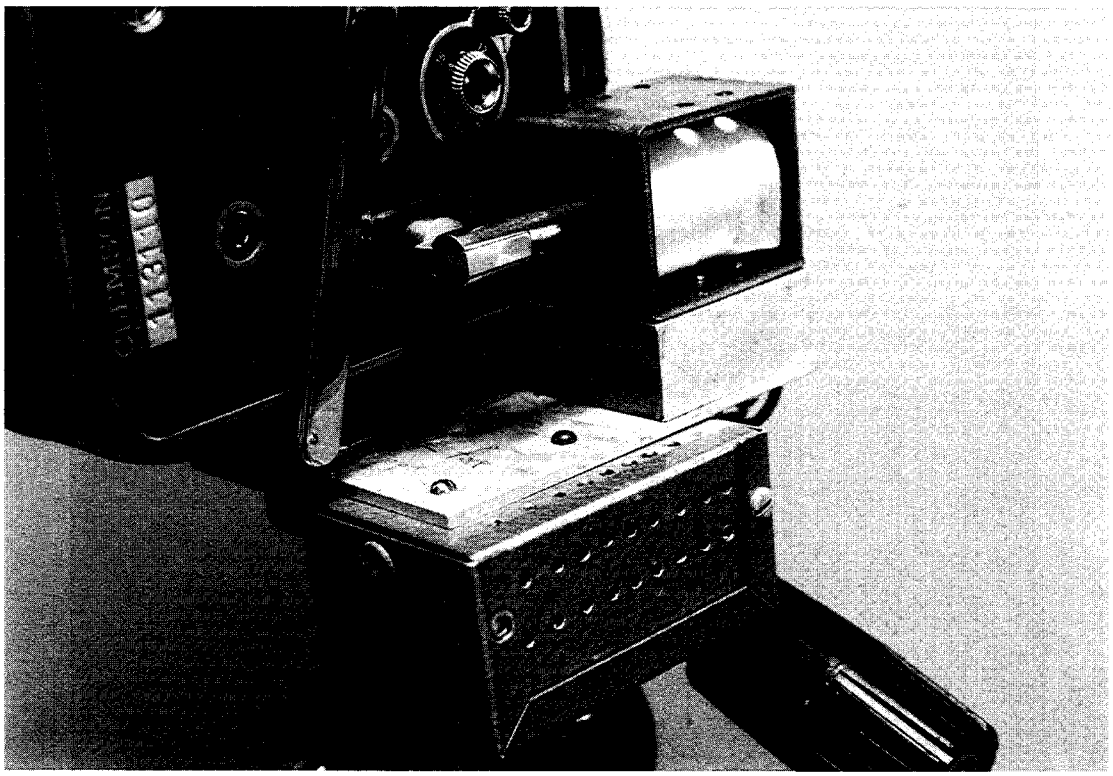

Figure 3-6. Automatic shutter mechanism for the Bolex camera.

monitor displays the vertical radar beam in the split image to the left of the screen and the star pattern in the field of the image intensifier over the remaining portion of the screen. The date and time are at the top of the screen at the upper left and upper right, respectively. The video camera directed up the radar beam outside the mobile laboratory is always positioned so that the top of the screen of the television monitor is toward the north, the right is west, and the left is east. This can be achieved by directing the top surface of the video camera toward the north star or to magnetic north if stars are not visible. When magnetic north is used, appropriate corrections for magnetic declination must be made. In Figure 3-5, the bright diagonal streak on the monitor is produced by a bird flying toward the southeast. If the radar displays in Figures 3-4 and 3-5 are compared, the echo from the bird can be seen as an extension at the top of the bright base of the beam in Figure 3-5. A vertical light beam (Figure 3-3) is used

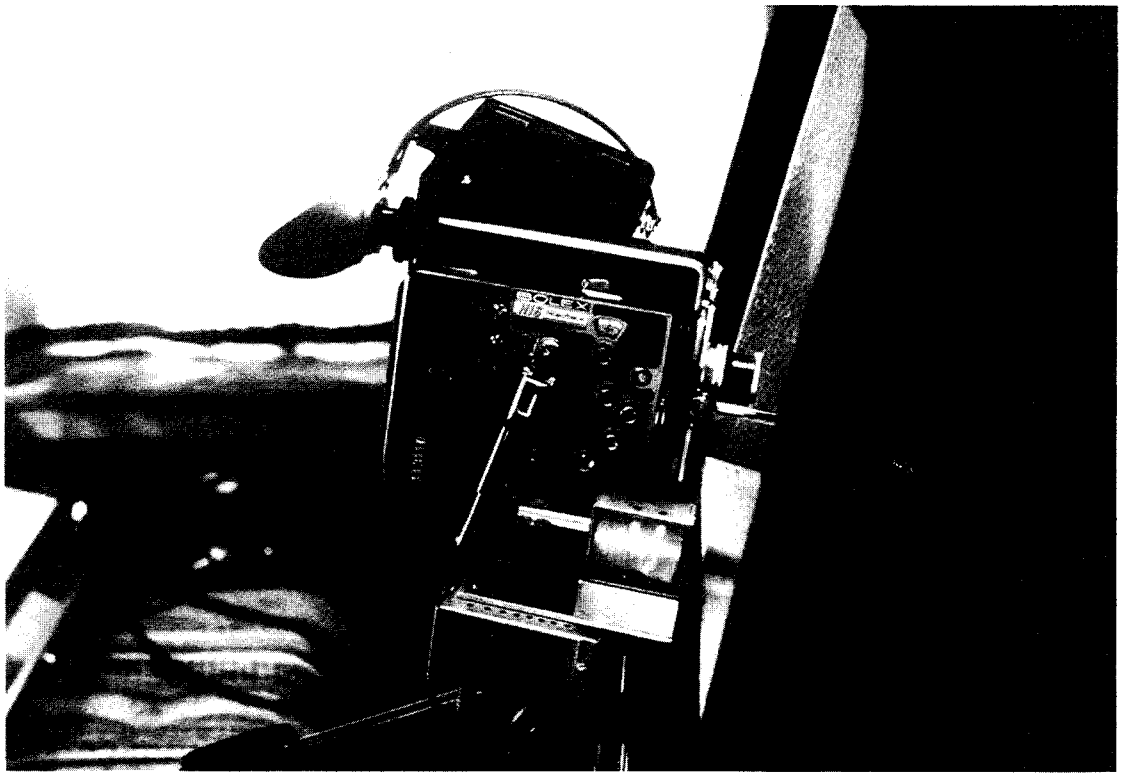

Figure 3-7. The movie camera setup for filming the Decca 150 radar display. Note the end of the light tight hood.

to provide illumination when in areas where no ground lighting reflects skyward. Under most weather conditions the light beam does not attract birds and it has no detectable effect on the flight behavior of the birds. On nights when very light mist is falling or on very hazy nights, occasionally birds will pause and hover in the light beam.

THE AUTOMATIC CINE FILMING SYSTEM

Viewing bird movements directly on the radar screen of the Decca 150 (or from a video tape) is difficult because the echoes fade rapidly. When time lapse cine films of the PPI are made, the movements are much more obvious and careful study with a motion analyzer is possible. To make a film record of the bird movements on the display, an automatic cine filming system was developed. The filming system consists of a spring-wound, 16 mm Bolex camera (Model H16), a standard pull-on-

operate solenoid shutter control, and an electronic circuit that controls current to the solenoid (see Figure 3-6). The voltage from the heading marker signal of the Decca 150 triggers this circuit so that the solenoid is energized for one revolution of the antenna and not energized for the next revolution. A single frame of the 16 mm film is exposed to one entire sweep of the radar antenna until the heading marker signal cuts off current to the solenoid and the next sweep is not filmed (while the next film frame is advancing). Thus, every other radar sweep is recorded on film.

The movie camera, solenoid, and encased electronic circuit are mounted on a tripod. When filming, a light tight hood constructed of wood and covered with black felt is attached to the front of the radar display unit (Figure 3-7). Once the camera settings and the radar display are adjusted, a separate black cloth is placed over the end of the hood completely covering the top, side, and back of the movie camera. This permits filming throughout the day irrespective of light conditions inside the mobile laboratory.

Figure 3-8 shows a single frame of the film record of the display from the Decca 150. This exposure was made when the radar was on 0.75 nautical mile range and the heading marker is pointing to 95° on the azimuth ring. A 24 hour clock is positioned to the upper right of the frame.

MOTION ANALYZER

Cine films of the surveillance radar display are analyzed with an Athena 224-ES Motion Analyzer Sound Projector. This motion analyzer is a L-W International version of Eiki 16 mm NT-0 projector. It can be operated at 1, 2, 4, 6, 8, 12, and 24 frames per second (FPS) in forward and reverse without flicker. A closed-loop DC servo system provides positive film control. Frame-by-frame advance and reverse can be controlled by push button with an unlimited single frame hold time. An electronic remote control has a LED readout frame counter and the design permits computer controlled operation.

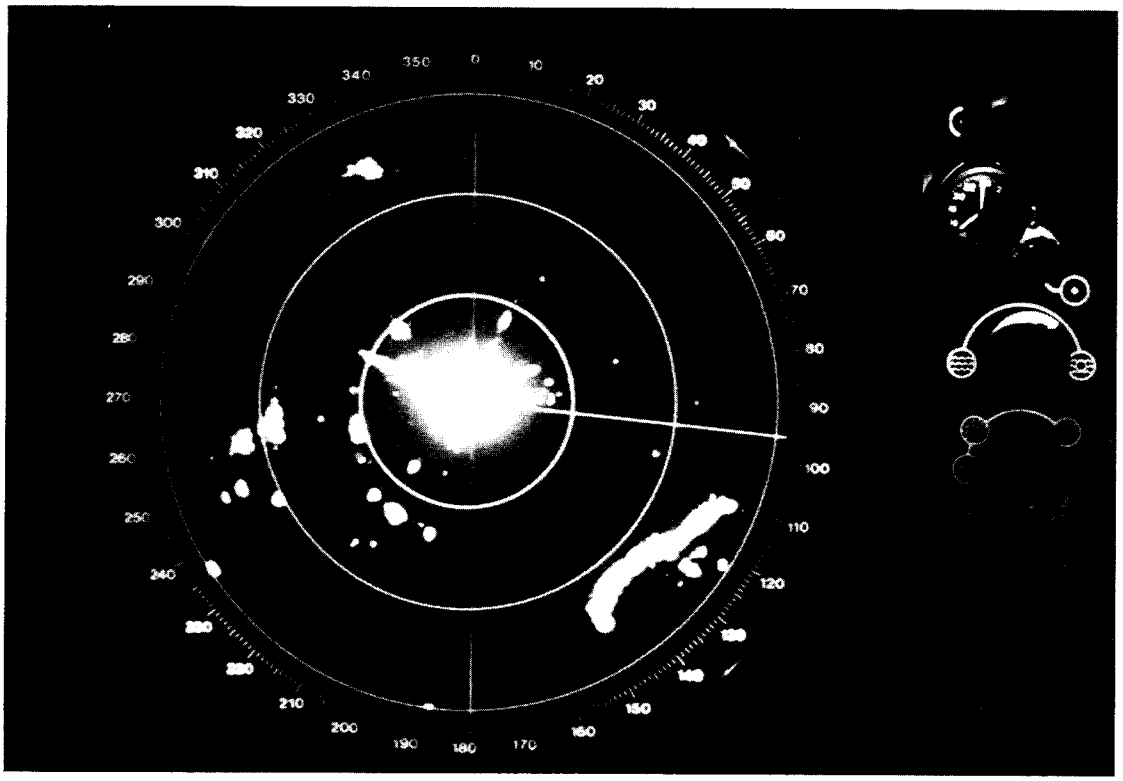

Figure 3-8. Display of the Decca 150 radar on 0.75 nautical mile range. The photograph was made at Flamingo, Florida in January 1983.

DISCUSSION

Although the radar systems can detect bird flights near the ground, the resolution of radar does not enable an opbserver to record details of the movements (e.g., how many birds in a flock, subtle differences in flight behavior like flaring). For this information, direct and indirect observations are needed to supplement the radar data, and at night the image intensifier proved indispensable to this end. It should be remembered that the proper orientation of an image intensifier requires some very low levels of scene illumination, and in certain cases when supplemental illumination was required to see flying birds after dark, a light source as small as a flashlight was found to be useful.

The video cameras and closed circuit equipment are the preferred method of recording data from the image intensifier and fixed-beam radar. The only

difficulty is that the video cassette recorder has a resolution of slightly more than 300 lines while the television cameras and monitor have 800 lines minimum. In certain cases when birds were far away and produced tiny images, they were visible on the video monitor, but were not visible on the video tape. Whenever these occasions arose, an audio comment at the appropriate time on the video tape provided much of the information that was lost because of poor VCR resolution. A cine film record would be better because of resolution, but does not lend itself to recording the image intensifier-radar displays simultaneously. Filming the high resolution television monitor would also be difficult and prohibitively expensive. Cine filming of the display is the best method of recording data using the surveillance radar. The automatic trigger mechanism enables every other scan of the radar beam to be filmed while the observer is making direct visual observations. Detailed procedures for gathering data will be discussed in the next section.

Section 4

OBSERVATION TECHNIQUES AND DATA ANALYSIS

INTRODUCTION

In this section the details of the observation techniques used to study the movements of birds near transmission lines will be outlined and discussed. Some of these techniques were developed during the field tests of the mobile laboratory beginning in the late fall of 1980. Although considerable data were gathered on the local and migratory movements of birds at the many field sites, only the data acquisition and analysis methods will be considered in this report. The information gathered on local and migratory movements during the development and testing of the mobile laboratory will appear as publications in refereed journals (e.g., 1). This is in keeping with the work statements developed by the Electric Power Research Institute for Phase I and II of the project "Avian Interactions with Transmission Lines."

DATA ACQUISITION METHODS

In this subsection the emphasis will be on data acquisition as it relates to studying the local and migratory movements of birds. Although the emphasis is on methods of data acquisition for studies of avian interactions with transmission lines, the methods have much wider applicability (e.g., to studies of bird movements near tall towers, bright flares, and magnetic disturbances). The techniques can also be used to study many basic aspects of the local and migratory movements of birds (e.g., the orientation of flight behavior, the timing of movements, the influences of weather). The following topics will be addressed in this subsection: the description of the study site, the gathering of weather data, direct and indirect visual observation techniques, and radar observation techniques.

Description of Study Site

The first objective of any field study should be a detailed description of the study area. Although the exact methods of description may vary, certain information is essential. The geographical location and topography of the study site should be recorded first. A map of the study area showing topography and habitat types should be drawn to scale. In the case of a study of avian interactions with powerlines, the location of the transmission line and the position and heights of the supporting towers should be indicated on the map. In addition, details about the configuration of the line and its supporting towers should be recorded (e.g., line configuration: flat, delta, or stacked; towers lighted at night with strobe lights). The recent final reports of studies of avian flight behavior and collision mortality for the Bonneville Power Administration have excellent examples of this type of description (see references 2-6).

The marine surveillance radar in the mobile laboratory can be used to obtain an excellent map of the study area. Figure 4-1 is a photograph of the radar display of the Decca 150 on 0.75 nautical mile range. Several ground features at a study site between Alamosa and Monte Vista, Colorado are visible. The vertical and horizontal lines in the display are echoes from houses, levees, roads, transmission towers, and roadside trees; the diagonal lines are echoes from large irrigation sprinklers. The radar map and topographic maps of course show excellent agreement. When using the radar to map a study site, the best results are obtained when the anti-clutter circuit is engaged and weak echoes close to the radar are eliminated. This is shown in Figure 4-2. In this figure, the upper photograph shows considerable clutter near the center of the display. In the lower photograph, the clutter has been eliminated by the anti-clutter circuit.

Recording of Weather Data

In any study of the impact of high voltage transmission lines on bird movements and collision mortality, the gathering of accurate weather data is essential. The formats that are used to record the data vary widely, but the type of data that must

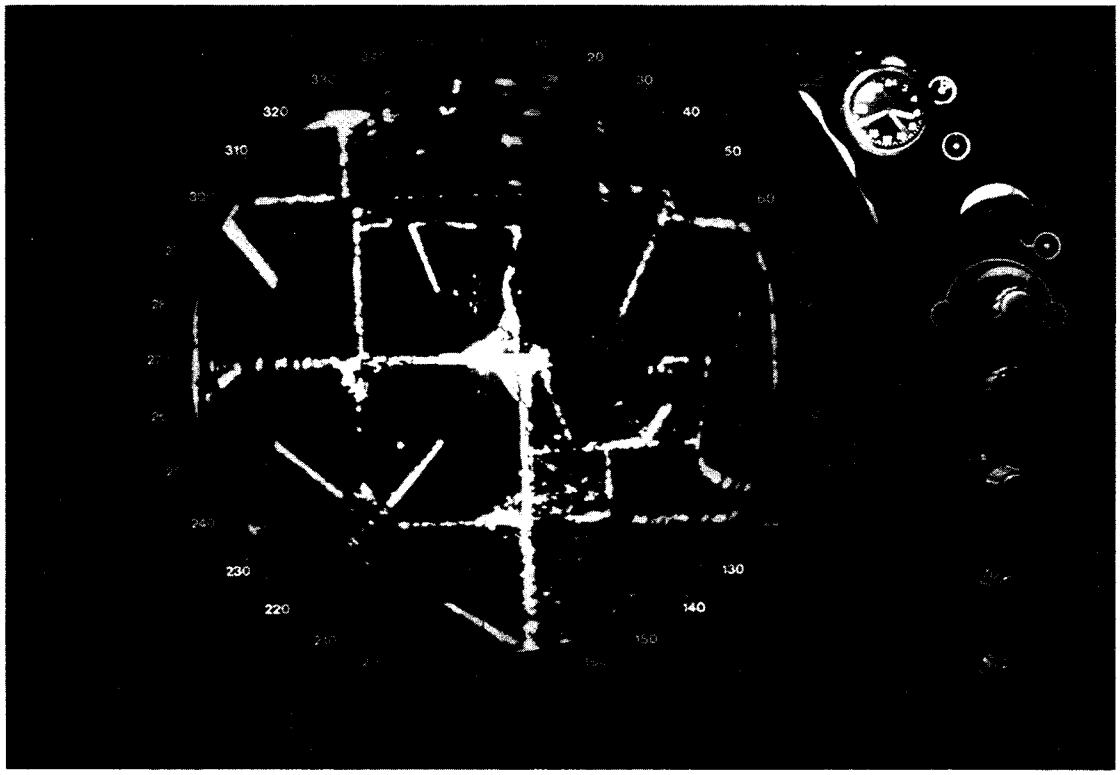

Figure 4-1. Display of the Decca 150 radar on 0.75 nautical mile range. This photograph shows the study site near Alamosa, Colorado.

be recorded varies little from study to study. The standard weather data gathered by the National Weather Service at hourly intervals are the following: sky cover in tenths, ceiling in hundreds of feet, visibility in whole miles and sixteenths, general weather at time of observation (e.g., thunderstorm, fog, drizzle), air temperature, wet bulb temperature, dew point, relative humidity, wind direction and speed. If at all possible data from the National Weather Service should be used if a weather station is close to the study site. Specific comments about the weather conditions at the site can be added as amendments to the official weather data. The observer should record all surface weather observations in a format similar to that found in Form MFL-10C of the National Weather Service. Single copies of these forms may be requested from weather stations throughout the United States. In addition to the standard weather data, the following should be recorded: the times of sunrise and sunset, the times of the beginning and the durations of civil and

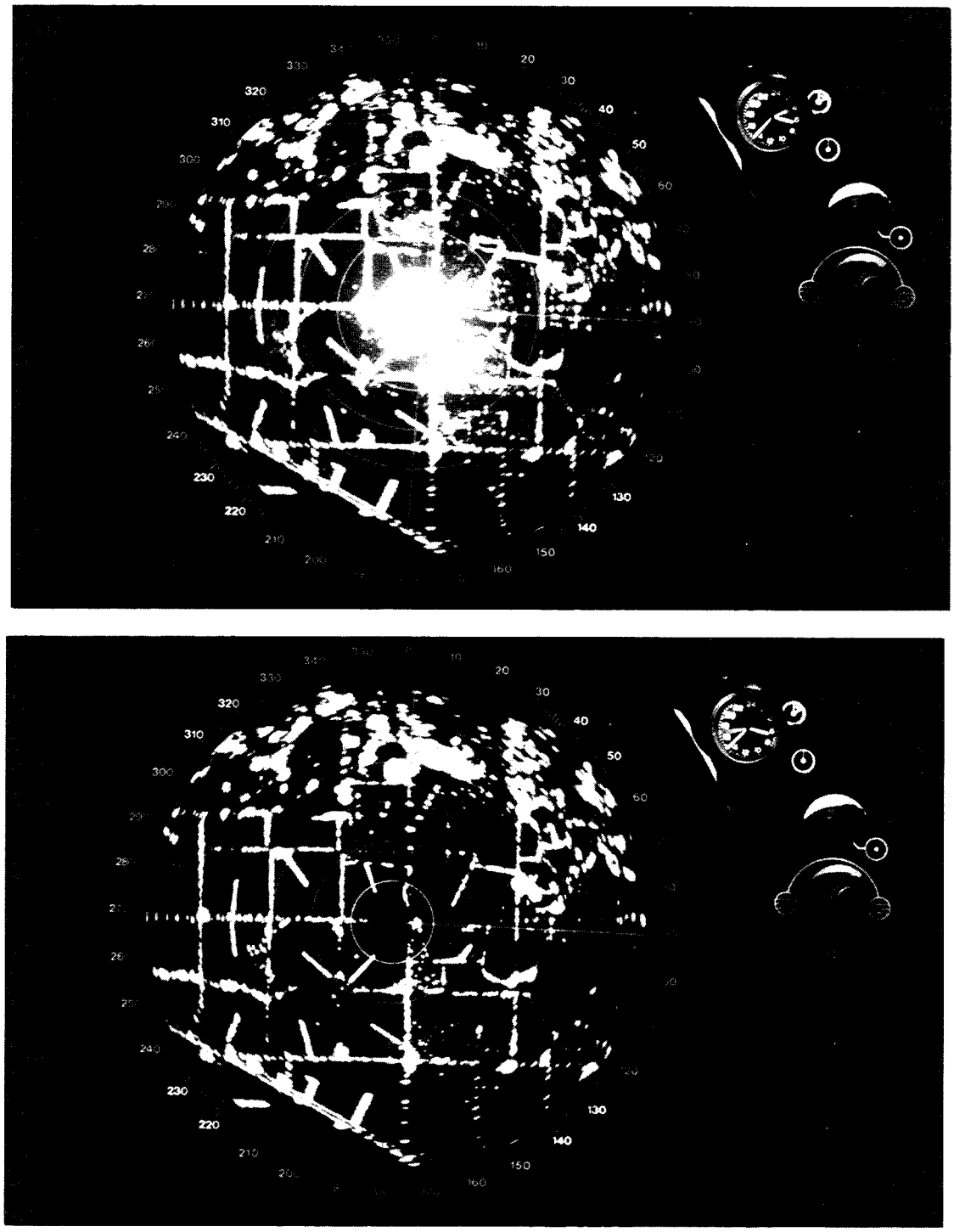

Figure 4-2. Radar displays of the Decca 150 near Alamosa, Colorado. The top photograph shows the clutter in the center of the display with normal video, but the clutter has been eliminated in the bottom photograph which was taken with the anti-clutter circuit on.

nautical twilight. The latter can of course be computed from the Air Almanac published by the U. S. Government Printing Office in Washington.

Other changing environmental conditions during observations should be noted in the remarks section of the weather data sheet. These comments could relate to disturbances in the area like hunting, low flying aircraft, and heavy road or boat traffic. Specific instances of disturbances should be noted on the data forms where actual observations of bird movements are being recorded and of course the time of the event noted.

Direct and Indirect Visual Observation Techniques

Observations of the behavior of birds in the vicinity of transmission lines are fundamentally important to the study of avian interactions with transmission lines, but if the impact of a transmission line is to be objectively assessed, two types of information on bird movements are needed. The first type of information relates to the flight behavior of birds in the vicinity of the power line, and the second type of information relates to the altitudinal distribution and orientation of all birds moving through the area transversed by the transmission line. If all bird movements take place well above the altitudinal zone of transmission line influence, then the line is likely to have little impact on bird movements through the area and collision mortality will be very low. If substantial numbers of the bird movements through an area occur within the zone of transmission line influence, then the line could potentially have an adverse affect on these bird movements, and collision mortality could be high. Consequently it is important to know the proportion of bird movements taking place within the zone of transmission line influence in relation to the total amount of bird movement crossing the line at all altitudes. The following visual observation techniques are discussed from this standpoint.

Direct visual observation techniques. The methods of making observations of bird flight behavior in the vicinity of transmission lines have received considerable

DATE _____ OBSERVER _____ STUDY SITE _____ PAGE _____

1	SITE NO.
2	
3	DATE
4	
5	
6	
7	TIME CLASS
8	
9	
10	
11	
12	SPECIES
13	
14	
15	FLOCK SIZE
16	
17	
18	
19	
20	APP. DIR.
21	
22	APP. SEC.
23	
24	CROSS SEC.
25	
26	APP. HT.
27	
28	CROSS HT.
29	
30	DEPT. HT.
31	
32	R. ZONE
33	
34	HT.
35	
36	DIR.
37	
38	FLARE
39	
40	
41	ABORT.
42	
43	
44	COLLISION
45	
46	WIND SP.
47	
48	
49	WIND DIR.
50	
51	PREC. TYPE
52	
53	PREC. RATE
54	
55	LINE NOISE
56	
57	VISIBILITY
58	
59	CLOUD COV.
60	
61	HUM. ACT.

Figure 4-3. Sample data sheet for recording direct visual observations of birds flying in the vicinity of transmission lines. [Source: Willdan Associates (8).]

attention, and only a few studies have attempted to use standardized methods of making direct visual observations during the day (see references 3, 4, 5, and 7 and Figure 4-3). The exact type of data gathered depends on the particular question the investigator wishes to answer. Information on the location, observer, date and times of observation, and type of optical equipment used and its manner of use

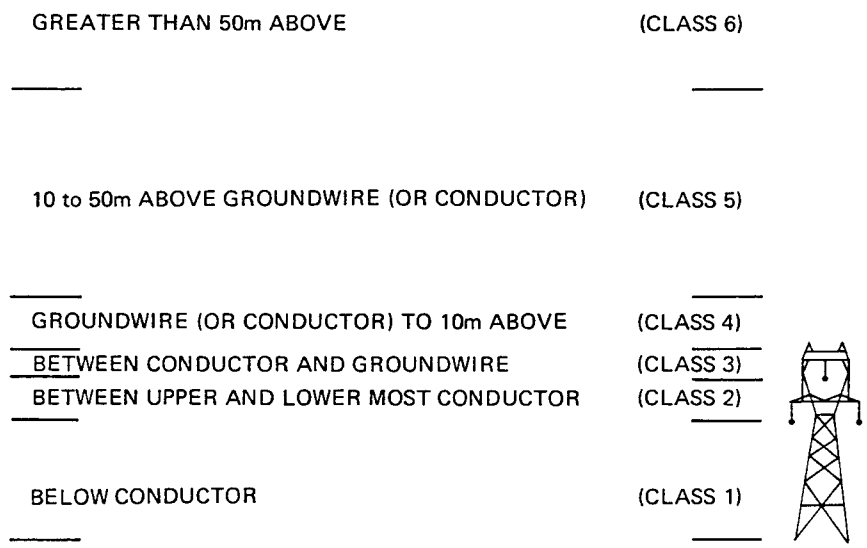

Figure 4-4. Basic altitude classes used to describe approach, crossing, and departure of flights. The heights of the lowest three classes can be measured with a rangefinder. [Source: James and Haak (4, p. 16).]

should be entered on the data form for each period of observation. During horizontal observations along a section of transmission line the following data are usually gathered: time of event; number of birds involved; species of bird(s); flight direction and flight altitude at approach, crossing, and departure; section of line crossed; behavior observed in space and time; and any pertinent comments related to the event such as a disturbance in the area when the flight behavior changed. The measurement of flight altitude in the vicinity of the transmission line can be problematical, but a relatively new electronic theodolite offers some promise (see reference 4, p. 16). If the use of a theodolite type device is not possible, the use of height classes is next best (Figure 4-4). With an optical rangefinder the limits of the lowest three height classes can be quantified at various points along the section of line being studied.

It is virtually impossible to record observations directly on the data sheets while making observations. Observations can be dictated into a portable recorder and later transcribed to the data sheets or the observations can be made with a video

camera and recorded with a video tape recorder that also accepts voice commentary. The latter method has some marked advantages (e.g., when flights are occurring at a rate too high for dictation), but it is not without shortcomings. Video records generally have poor resolution (picture quality) and the depth of field is frequently poor. The more sensitive the television camera the poorer the resolution.

During testing and evaluation of the mobile laboratory, direct visual observations of birds crossing a transmission line were usually made when the display of the Decca 150 was being filmed. Such observations provide a detailed record of the species, number, flock sizes, and altitudinal distributions of birds crossing the line and this record complements the film record of the radar display.

Indirect visual observation techniques. During the daylight hours when flight activity is so great that it cannot be recorded by dictating observations into a tape recorder and during the night when regular visual observations are not possible, indirect visual observation techniques must be used. Although cine cameras can be sued to record the data, the costs of buying the film and processing quickly become prohibitive. A high resolution video camera and video tape recorder can substantially reduce the costs, and after data analysis is completed the tapes can be erased and reused. Consequently the latter was the system of choice for the mobile laboratory.

For daytime observations, the RCA TC 1005/01 camera is equipped with a Sony zoom lens for wide- and narrow-field surveillance. The camera with lens is mounted on a tripod and directed toward the section of transmission line to be monitored. The camera coaxial cables and power cord are connected to their respective outlets on the radar antenna pedestal. Inside the mobile laboratory, the splitter-inserter, the date and time generator, the video tape recorder, and the video monitor are turned on. The switch on the splitter-inserter is set to the position for camera one only (the "outside" camera), and the date and time are adjusted using the

switches on the front panel of the date and time generator. A video tape is inserted into the recorder, and a microphone is plugged into audio channel one. All components are energized and as birds fly across the area of the transmission line, voice comments are made into the microphone. It was found that voice commentary on the video tape in real time provide substantial and helpful information during the analysis of the video tapes. Observations usually last for one hour at a time, and two observations can be recorded on one video tape. Because the camera is equipped with automatic gain control, it automatically adjusts for changing light levels. Although some information on the directions of movements can be obtained, the low angle of observation generally prevents exact determination of the azimuth direction of a flight, and only general directions can be recorded.

When information on the exact direction of flight aloft is needed, the video camera and lens are directed vertically with the top of the camera directed to the north. With this arrangement, when birds crossed through the field of view they are displayed on the video monitor such that the top of the screen is north, the bottom is south, the left side is east, and the right side is west. With the aid of an azimuth ring, the exact directions of movement can be determined from the television screen. The altitude of the birds flying through the field of the camera can be determined with the vertically pointing radar, and this will be discussed in the next subsection of this report.

For observations at night, the video camera and image intensifier are used in the same way as the video camera and zoom lens for daytime observations. In certain instances when ambient lighting of the powerline is absent or insufficient, a 500 watt spotlight (General Electric Lamp PAR-64) is used to illuminate the line during horizontal observations. For nocturnal observations of birds flying overhead, the spotlight is pointed vertically so that the light beam intercepts the visual field of the image intensifier and the beam of the vertically pointing radar (Figure 3-3). Because nearby insects in the light beam are confusing when detected by the

image intensifier, the spotlight should always at least 10 m to the side of the video camera-image intensifier location. When a less powerful light source is used, the problem of brightly illuminated insects being detected by the image intensifier is markedly reduced.

Although the use of visible light to illuminate the area being monitored could introduce the problem of birds being attracted to the light or seeing the transmission line, at no time were such effects detected during the field tests of the mobile laboratory. The use of an infrared spotlight has met with success in another study (5). Additional details of making nocturnal observations of bird movements in the vicinity of transmission lines can be found in Meyer (3), James and Haak (4), and James (5); and I (9) have outlined the procedures for making nocturnal observations of birds flying overhead.

Radar Observation Techniques

Radar is used in the mobile laboratory for the detection of bird movements when visual observations cannot be made because of weather conditions (e.g., fog), or when birds are flying too high overhead to be detected by visual means. The use of the fixed-beam antenna configuration enables the radar and the video camera with a telephoto lens or night vision sight to sample the same space at the same time. In turn, the information from both of these sources can be displayed on the video monitor simultaneously. The fixed-beam radar not only serves as a highly accurate rangefinder for birds detected visually, but it also is able to detect birds when visual observations are not possible. The surveillance radar is used to monitor the pattern of bird movements at lower altitudes in the vicinity of the mobile laboratory. Unlike the fixed-beam radar, the surveillance radar provides a geographical perspective so that movement patterns can be related to topography.

Fixed-Beam Radar. During field tests of the mobile laboratory the radar was used during most periods of visual observation. The procedures followed for visual observations with the television camera have already been discussed. At the

beginning of an observation period the generator is started if the mobile laboratory is not in an area where line current is available. The switch on the AC power unit for the radar and the power switch on the display unit must be turned on. While the radar T/R unit is warming up, the antenna is aligned so that it will sample the same space as that monitored by the video camera located outside the mobile laboratory. The antenna and camera are directed horizontally for observations of transmission lines and are directed vertically for observations of birds flying overhead (see Figure 3-3). After about three minutes, the transmit switch on the radar is turned on and the radar beam appears on the PPI. All closed circuit video equipment is energized, and the switch on the splitter-inserter is placed in the middle position so that signals from both cameras can be displayed on the video monitor.

The video camera inside the mobile laboratory is placed on a tripod in front of the display unit of the radar and adjusted so that the radar beam is positioned in the split screen portion to the extreme left of the display (see Figures 3-4 and 3-5). The camera adjustment is made by looking at the television screen. The date and time are adjusted on the front panel of the date and time generator, and then the alignment between the radar beam and the outside video camera is checked. This is done by looking at the television monitor and noting whether a bird in the visual field gives an echo along the radar beam. When the alignment is not correct, the outside television camera should be adjusted until there is agreement between what the camera and radar detect. The beam width of the radar is about the same as the angular field of view of the video camera with the zoom lens or image intensifier, but it is easier to make slight adjustments of the camera on the tripod rather than change the position of the radar antenna on the roof of the mobile laboratory. With practice the alignment procedure is easy with the aid of a circular level, but the use of a small laser on the antenna framework would greatly simplify the alignment between radar beam and video camera. Once good alignment is achieved, the range of the radar is set at one statute mile (1.6 km), and the video recorder

is started. Immediately after the onset of video recording the radar beam is calibrated by moving the variable range mark along the displayed radar beam in increments of 0.1 statute mile (0.16 km). The range scale can then be marked on the screen of the video monitor as well as during the replay of the tape. During periods when few birds are flying, data can be gathered directly from the radar screen, but when activity increases markedly, data must be extracted from the video tapes at a later time. Whenever resolution differences between monitor and VCR result in a loss of data, observations from the television screen are dictated into a microphone attached to the video recorder.

For horizontal observations of transmission lines the type of data gathered has already been discussed. For observations of birds flying overhead the following data are recorded (Figure 4-5): time of event, azimuth of movement, altitude of movement, and pertinent comments (e.g., type of bird, changes in flight behavior). The direction of movement is recorded either as clock face coordinates (e.g., in at one and out at six), and later converted to the true azimuth directions (see reference 9), or the azimuths are read directly from an azimuth ring on the television screen. The azimuth ring on the video screen has to be reversed because the directions of movement are being observed from below rather than from above as on typical radar screens. The altitude of the bird is read directly from the range scale marked on the screen of the video monitor.

Surveillance Radar. The pedestal of the Decca 150 is mounted on the roof of the mobile laboratory in such a way that when the heading marker on the radar display is pointing to the same azimuth as the front of the vehicle, the azimuth directions on the display will be geographically correct. For observations of birds near transmission lines, a range of 1.5 nautical miles is ideal. If smaller birds are being monitored, the range should be decreased to 0.75 nautical miles, because most individual small songbirds cannot be detected on the Decca 150 beyond a range of 0.5 nautical miles. Before filming the radar display, the camera spring drive must be fully wound. If this is done, approximately 45 minutes of uninterrupted filming

Weather: wind _____;
temp _____; cloud cover _____
_____; humidity_____; baro pr
_____; gen weather _____
_____.
Comments: _____
_____.

Date: _____

Location: _____
_____

Time: _____to _____

Type of Data: _____

T	AZ	ALT	COMMENTS	T	AZ	ALT	COMMENTS

Figure 4-5. Sample data sheet for recording information from the video tape record.

is possible. Likewise, the clock should be checked to make sure it is wound and accurate. The frame counts at the beginning and at the end of filming should be recorded along with other details (e.g., camera f-stop, radar range setting). Once

the camera and radar settings have been adjusted, the hood should be put in place, the camera positioned and focused, and the black cloth draped over the camera and the open end of the hood. The power cords for the clock light, the solenoid, and the heading marker pulse should be plugged into their respective outlets. When the switch on the cord carrying the heading marker pulse is engaged, the filming will begin, and the click of the camera shutter will be heard every 2.6 seconds-- the time for one complete revolution of the antenna.

DISCUSSION

The performance of the electro-optical and radar systems was thoroughly evaluated in the field under diverse weather conditions at several different locations. Early in the project it was found that the vibration from the generator affected the quality of the picture from video camera one when it was mounted on the radar antenna framework. This problem was overcome by mounting the video camera on a tripod below the position of the radar antenna as shown in Figure 3-3. When the mobile laboratory was powered by line current, the original arrangement of the video camera on the radar antenna framework proved acceptable.

During the tests of the electro-optical and fixed-beam radar equipment it was found that the radar could detect birds at distances where the video camera with a 150 mm lens and an observer using 10 x 50 binoculars could not see them. When the radar unit was properly tuned, even small birds such as warblers could be detected at ranges of 1200-1500 ft (365.8 m) while birds the size of geese were detectable at ranges of one to 1.5 mi (1.6 to 2.4 km). These measurements were made when the radar was operating on short pulse. On long pulse the distances of detection were increased by a factor of two. Short pulse provides greater resolution of radar targets but has less energy and cannot detect birds at distances as great as when the radar is operating in the long (wide) pulse mode. Long pulse on the other hand can detect birds at greater distances but suffers from lack of high resolution. Both short and long pulse were used to gather data during a period of observation.

The resolution of the television camera and monitor is 800 lines, but when the video recorder is used the resolution drops to 300 lines. Because of this reduction, data were gathered directly from the television screen whenever possible. The use of a high resolution video recorder should be considered in future studies of avian interactions with transmission lines if video observations are contemplated.

During horizontal observations birds flying in the vicinity of transmission lines were readily detected by the fixed-beam radar. The radar detected only the supporting towers of the transmission lines and not the lines. In contrast, the video and direct visual observations provided detailed and high resolution information on the behavior of the birds in the vicinity of the transmission lines. Thus the visual observation techniques and the radar observation technique are complementary. The visual techniques provide detailed information on the types and numbers of birds and their flight behavior near the transmission lines. The radar technique provides accurate information on the ranges of the birds and verification of sightings.

How does the radar method of monitoring bird movements near transmission lines compare with other methods? Very few data are available to answer this question, but during the final phase of the study of the impact of the Ashe-Slatt 500 kV transmission line on birds at Crow Butte Island (10, Appendix IV, pp. 148-149), the field crew personnel at Crow Butte used the mobile laboratory to evaluate the effectiveness of the night vision devices (NVD) for night viewing and to check the effectiveness of daylight viewing. The radar systems of the mobile laboratory were found to be more effective during night viewing and long range detection of overall flight patterns. Observers using the radar detected flights not detected by observers using NVD. The radar confirmed the fact that the number of birds crossing the line at night was very small compared to the total crossing during daytime.

During daylight observation, the radar did not perform any better than direct observation at the line crossings, and of course the radar could not be used to identify species of the altitude of birds approaching the line. The flight patterns of birds within a 5 km radius of the mobile laboratory were clearly detectable. On the basis of these comparisons, it was concluded (10) that when information on night flight activity is needed, the radar systems of the mobile laboratory should be used in place of night viewing devices. Moreover, when information on the overall flight patterns is needed, the surveillance radar in the mobile laboratory would be very useful.

Birds flying overhead were also readily detected by the radar and electro-optical systems. On every night (except one) when the surveillance radars at the Lake Charles Municipal Airport indicated birds aloft, the systems in the mobile laboratory recorded similar flight activity. The only exception was on one evening when bird migration from over the Gulf of Mexico was at an unusually high altitude (a mean of 8000 ft AGL, 2438 m AGL). On this occasion the radar unit in the mobile laboratory indicated a dense migration aloft, but most of the birds were too high to be recorded by the video camera-image intensifier system. The agreement between the fixed-beam radar in the mobile laboratory and the airport and weather surveillance radars was excellent (11). By monitoring bird movements aloft with the fixed-beam radar, I was able to accurately predict the amount of bird movement displayed on the large weather and airport surveillance radars on virtually every evening.

The evaluation of the performance of the Decca 150 surveillance radar showed that the radar could detect birds flying just above the ground, and in many instances waterfowl could be detected sitting on the water surface. Figure 4-6 shows the mobile laboratory positioned near the Ashe-Slatt 500 kV transmission line at Crow Butte Island in the Columbia River, Washington. In Figure 4-7, the north-south line of dot echoes is produced by marker balls and spacers on the transmission line that crosses the river. The two strong lines of echoes at the top and bottom of

Figure 4-6. The mobile laboratory at Crow Butte, Washington, where a 500 kV transmission line crosses the Columbia River.

the transmission line echoes are produced by the north and south shorelines of the river. All of the echoes between the shorelines are produced by ducks sitting on the river. Thus it is possible to monitor the distribution of birds in relation to powerlines and topographic features with a small marine radar. Although ground objects are readily detected with the surveillance radar, they pose no real problem and are in fact useful when cine films are analyzed.

With the marine surveillance radar, single gulls could be detected at a range of one nautical mile, and single songbirds could be detected out to 0.5 nautical mile. When birds were flying perpendicular to the beam, they were detectable at greater ranges than when they were flying toward or away from the radar antenna. Additional information on the detectability of various species of birds with the Decca 150 will will appear in a forthcoming publication (12).

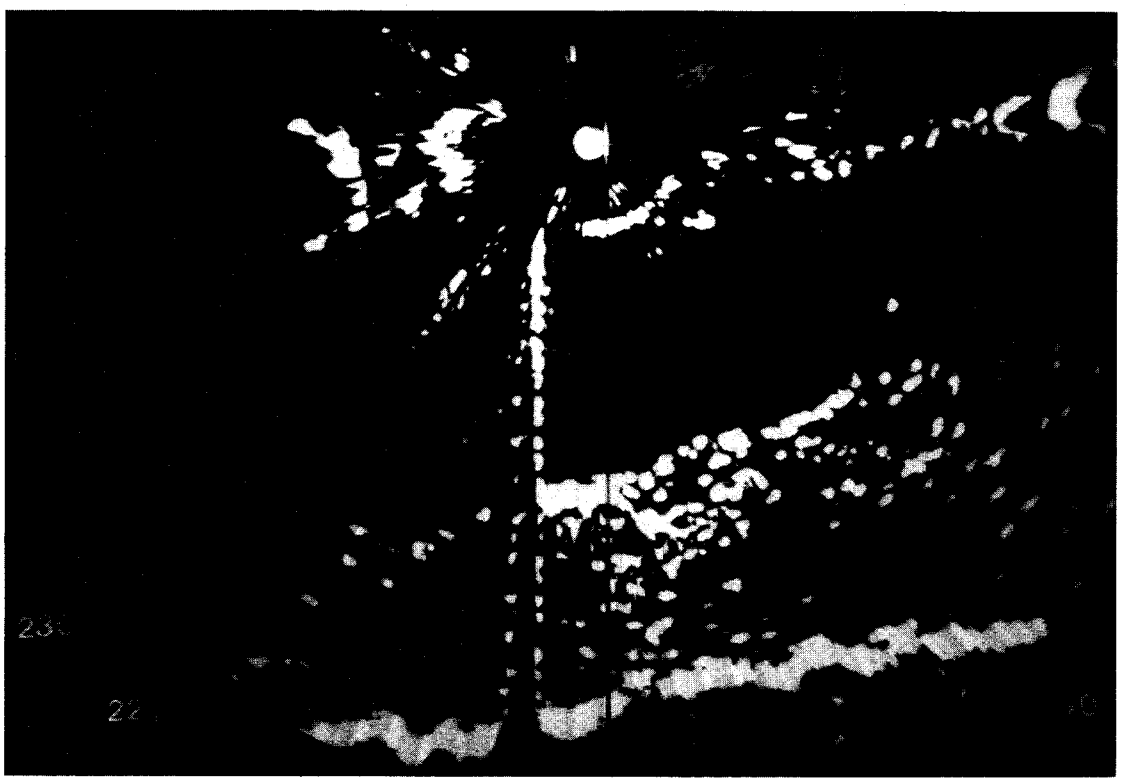

Figure 4-7. Radar display of the 500 kV transmission line crossing the Columbia River at Crow Butte, Washington.

When ground fog eliminated visual observations, both radar systems continued to detect bird movements. Even in misty rain the radars continued to detect birds, but when hard rain was falling, the radar beams were saturated with echoes from the rain. The observation techniques used in the mobile laboratory will undoubtedly improve as more data are gathered and more testing is completed, but it can be said confidently that the systems work and can be trusted to gather detailed and accurate data on the local and migratory movements of birds near transmission lines and at any other sites where similar data are needed.

DATA ANALYSIS METHODS

The quantity of data gathered during the course of the testing of the mobile laboratory is immense. The time required to extract the data from the video tapes is considerable, particularly when large numbers of bird movements are involved.

At present all of the video tapes made during the course of the field work have been thoroughly analyzed. The information on local and migratory movements of birds near transmission lines and elsewhere are now being published.

The methods of data analysis are straightforward. The data are extracted from the video tapes and added to data forms in the same manner as the dictated information from direct visual observations is transcribed. The forms are in a computer compatible format, and the data are entered into permanent computer files using an ITT Courier 270 Information Display System. Once in the computer (IBM 3033), the data are analyzed using the software of the Statistical Analysis System (SAS), SAS Institute, Raleigh, North Carolina. The system is quite easy to use and is one of the most diversified data handling and statistical packages available. The SAS graphics package is very helpful in producing graph output after data analysis. The graph output can be on computer paper or it can be routed to the Calcomp or Versatec printers in the main computing center. Each of these options has been used in data analysis. Figure 4-8 is an example of the results of some of the analyses of the data collected during the spring of 1981. The plot on the left of the figure shows the altitudinal distribution of bird recorded in the sample and the plot on the right shows the direction of flight for the same sample. In addition to the circular plots, circular statistical information is generated (see 13). The computer programs were developed by Paul Hamel and subsequently modified as necessary. Copies of the statistical programs may be requested from Sidney A. Gauthreaux, Jr., Department of Biological Sciences, Clemson University, Clemson, SC 29631.

Currently the extraction of information on bird movements from the cine film is very cumbersome and time consuming. With the motion analyzer it is possible to map the movements accurately in time and space, but the process is quite slow. A procedure using a digitizer board to quantify information on fish schooling is being developed at Clemson, and it appears that this procedure will simplify greatly analysis of the films of the surveillance radar display.

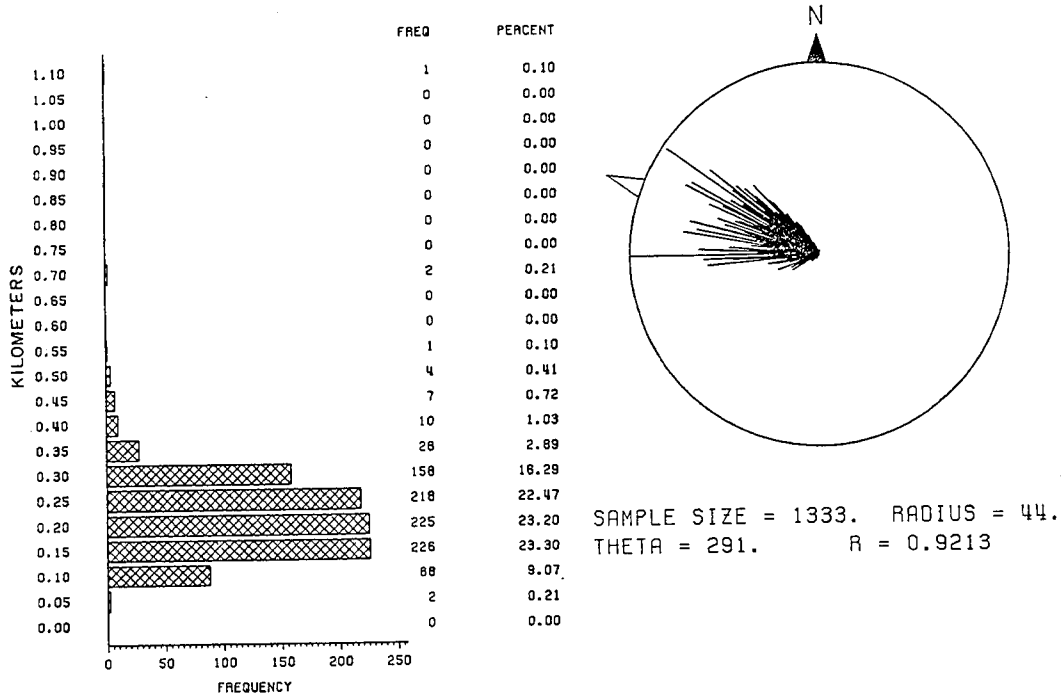

Figure 4-8. Computer plots of data taken from a video tape record of bird migration in the spring of 1981.

REFERENCES

1. P. Kerlinger and S. A. Gauthreaux, Jr. Flight behaviour of Sharp-shinned Hawks during fall migration: I. Over land. Animal Behaviour 32, 1984, pp. 1021-1028.

2. J. M. Lee, Jr. Effects of transmission lines on bird flights: Studies of Bonneville Power Administration lines. In: M. L. Avery (ed.). Impacts of transmission lines on birds in flight. Proceedings of the workshop on impacts of transmission lines on migratory birds. 31 Jan.-2 Feb. 1978, Oak Ridge, Tenn. Oak Ridge Associated Universities, Oak Ridge, Tennessee. September 1978, pp. 53-68. Supt. Doc. U.S. Govt. Printing Office, Washington, D.C.

3. J. R. Meyer. Effects of transmission lines on bird flight behavior and collision mortality. Report prepared for Bonneville Power Administration by the Western Interstate Commission for Higher Education. Bonneville Power Administration, Portland, Oregon, 1978, p. 200.

4. B. W. James and B. A. Haak. Factors affecting avian flight behavior and collision mortality at transmission lines. Report prepared for Bonneville Power Administration by the Western Interstate Commission for Higher Education. Bonneville Power Administration, Portland, Oregon, 1979, p. 110.

5. B. W. James. Impact of the Ashe-Slatt 500 kv transmission line on birds at Crow Butte Island: Preconstruction study. Report prepared for Bonneville Power Administration by the Western Interstate Commission for Higher Education. Bonneville Power Administration, Portland, Oregon, 1980, p. 98.

6. L. S. Thompson. Transmission line wire strikes: Mitigation through engineering design and habitat modification. In: M. L. Avery (ed.). Impacts of transmission lines on birds in flight. Proceedings of the workshop on impacts of transmission lines on migratory birds. 31 Jan.-2 Feb. 1978, Oak Ridge, Tenn. Oak Ridge Associated Universities, Oak Ridge, Tennessee. September 1978, pp. 27-52. Supt. Doc. U.S. Govt. Printing Office, Washington, D.C.

7. D. E. Willard and B. J. Willard. The interaction between some human obstacles and birds. Environmental Management 2 (4), 1978, pp. 331-340.

8. Willdan Associates. Impact of the Ashe-Slatt 500 kV transmission line on birds at Crow Butte Island: Postconstruction study year 1. Prepared for Bonneville Power Adminstration, Portland, Oregon, 1981, p. 110.

9. S. A. Gauthreaux, Jr. Direct visual and radar methods for the detection, quantification, and prediction of bird migration. Special Publication No. 2, Department of Zoology, Clemson University, Clemson, S. C., 1980, p. 67.

10. Willdan Associates. Impact of the Ashe-Slatt 500 kV transmission line on birds at Crow Butte Island: Postconstruction study final report. Prepared for Bonneville Power Administration, Portland, Oregon, 1982, p. 155.

11. S. A. Gauthreaux, Jr. Radar measurements of the altitude of trans-Gulf migration on the northern coast of the Gulf of Mexico. Paper presented at meeting of the Wilson Ornithological Society, Wilmington, North Carolina, June 1984, and to be submitted to the Auk.

12. S. A. Gauthreaux, Jr. The use of small marine radars for studies of bird movements. Paper to be submitted to the Journal of Wildlife Management.

13. E. Batschelet. Circular statistics in biology. Academic Press, New York, 1981, p. 372.

ABOUT EPRI

The mission of the Electric Power Research Institute is to discover, develop, and deliver high value technological advances through networking and partnership with the electricity industry.

Funded through annual membership dues from some 700 member utilities, EPRI's work covers a wide range of technologies related to the generation, delivery, and use of electricity, with special attention paid to cost-effectiveness and environmental concerns.

At EPRI's headquarters in Palo Alto, California, more than 350 scientists and engineers manage some 1600 ongoing projects throughout the world. Benefits accrue in the form of products, services, and information for direct application by the electric utility industry and its customers.

EPRI—*Leadership in Electrification through Global Collaboration*

Printed with soya inks on recycled paper (50% recycled fiber, including 10% postconsumer waste) in the United States of America.